SYMBIOTE

PRODUCT CATALOG 2026



THIS PAGE LEFT BLANK

TABLE OF CONTENTS

1 Overview

2 Frames and Connectors

3 Tables

4 Work Surfaces and Supports

5 ESD Grounding Hardware

6 Shelving

7 Storage and Display

8 Electrical and Air

9 Cable Management

10 Lab Products

11 Computer Support

12 Material Handling and Assembly

Welcome to our SIP (Symbiote Integrated Products) catalog. This catalog can change frequently; please review the changes below to keep your printed catalog up-to-date. Reference www.symbiote.com for the latest information.

Updates are noted with the revision (Rev.) date located in the table at the bottom of the page. Changes to the page may include, but are not limited to, the introduction of a new product, change in description or elimination of a product.

- Change Date: effective date of the change made to the catalog
- Page Number: page identified where the change was made
- Description: brief description of the change that was made

Change Date	Page Number	Description
11.01.25	Section 4	Added Corian Surfaces and Square Edge Work Tops. Removed Full-Round Edge and Peninsula Surfaces.
06.26.25	1.8, 1.9, 7.10-15, 10.39, 10.44-55, 12.7	Added Accessory Rail, revised payment terms and warranty details, and revised sink dimension details.
02.27.25	4.25, 8.5	Added Power Distribution Rail and Surface Support Bar.
02.13.25	3.29-32, 12.7	Added Tetrad Table and revised Tote Holder.
01.14.25	1.7, 7.2	Replaced fabric option Cement (M031) with new Limestone (M040).
10.01.24	3.26, 4.10-11, 4.28-29	Revised Symple Table height range. Updated edge descriptions for hardwood.
06.20.24	All	Removal of Sand Fleck laminate offering.
06.13.24	4.40, 8.2, 10.34-35	Added Greenstone Epoxy, Revised Epoxy Surface and Backsplash Edge Profile and revised Plug Strip Outlet Counts.
06.22.22		Removal of ESD paint offering.
01.06.21	2.2, 9.2, 9.3, 11.8	Revised description and/or notes; changed FSE1SM image.
12.24.20	1.7, 3.26, 10.34, 4.40	Added Symple Table Base, Epoxy Lab Surfaces and Epoxy Backspashes.
11.04.20	6.5	DAW Dissipative Arctic White replaced with DW Dissipative White Laminate.
11.02.20	Section 3	Discontinued Hand Control Switch A on electric tables; replaced with J Switch.
10.27.20	12.5; 7.4	Discontinued D Tote; Revised Magnetic White Board.
09.24.20	1.7; Section 4	DAW Dissipative Arctic White replaced with DW Dissipative White Laminate.
08.20.20	10.30, 10.35	Added ADA Lab Legs and ADA Lab Leg Panels.
07.22.20	3.22	Notes section: optional Riser Frame available.
03.12.20	10.21-22	Added Sink Base Cabinets.
01.28.20	3.26	DPF1K (J) replaces DCSW (A) as the standard, included switch.
01.16.20	Section 10.1-24	Revised Section 10 notes for products with locks and how they are keyed.

Rev 11/01/25

OVERVIEW

General Information. 1.2
Colors and Finishes 1.6
Warranty and Contract Terms 1.8

1

ABOUT SYMBIOTE

- Symbiote, Inc. ("Symbiote") manufactures highly specialized furniture for three markets: 1) Health / Life Science; 2) Tech Labs; and 3) Aerospace / Defense. All products and components are engineered with adaptability in mind to support innovative work processes.
- We offer two approaches to serve our customers – a wide range of standard, modular products plus a responsive, custom product development program.

CUSTOM PRODUCT QUOTES

- Please submit your custom requests in the form of a written description of your specifications, and/or a sketch of your application needs. Symbiote will acknowledge the request by fax providing you with a special product number, a quote number and details on pricing and delivery.

ORDERING

- Please order products by using the complete product number. Specify quantity, the product number, description, finish option and any other specifying information. When ordering custom products, include the quote number and special product number provided by Symbiote. Purchase Orders can be submitted electronically to symbiote@symbiote.com; fax to 616.772.1798; or send by conventional mail to 300 N. Centennial Street, Zeeland, MI 49464.

A NOTE

- This catalog serves as a general guide for ordering. The illustrations are typical and may not be a true depiction of each product. The illustrations and descriptions are based on the latest information available at the time of publication. All dimensions listed are nominal. Symbiote reserves the right to make changes at any time without notice to finishes, materials and specifications and also to discontinue finishes and products.

COPYRIGHT INFORMATION

- Symbiote® and ErgoStat® are registered trademarks of Symbiote, Inc.
- Please call, fax or email us with any questions you may have about this catalog or our products.

PRODUCT DESCRIPTION

- Each catalog page provides you with valuable information about each of the products. It is a brief description of what the product is, what it does and what it includes. The Description applies to all product variations on the page unless otherwise noted.

HOW TO SPECIFY

- Specifying information is outlined toward the middle right center of each catalog page. Also note the information contained in the Notes section of the catalog page before specifying.

COLORS AND FINISHES FOR CATALOG ITEMS

- Color and Finish options are identified under the heading "How to Specify" and include the appropriate finishes available for the product on that page. There are a variety of standard and dissipative paint finishes, laminates and fabrics to choose from.

NOTES

- In this section of the catalog we state restrictions, exceptions and important considerations for the application, installation or ordering of the products. There may be options and features that apply to only some of the product variations on the page.

PRODUCT ILLUSTRATION

- Two types of illustrations are provided for your reference. Context drawings of the product allow you to see how the product functions in an actual workstation setting. Dimensional drawings provide you with 2D illustrations of the product and are used in conjunction with the chart at the bottom of the page. The dimensional drawings define which measurements Symbiote classifies as Height (H), Width (W) and Depth (D) on that particular product.

PRODUCT NUMBER

- When ordering, please use the complete product number for the appropriate product variation, including finishes and any other specifying information provided in the Notes.

DIMENSIONS AND WEIGHTS

- Nominal dimensions and weights are provided in standard American measurements of inches and pounds. Metric measurements of millimeters and kilograms are shown in brackets.

PRICES

- Prices are provided in U.S. dollars in the Price Index only. Symbiote offers a product specification service that provides pricing along with drawings and component lists of your stations. Consult your local Symbiote Sales Representative or Symbiote Customer Service Representative to request a quote.

ErgoStat

- ErgoStat® mobile workbenches perform well in applications requiring ergonomic features such as simultaneous adjustability of surface and riser height, articulating trays and holders.
- Add modular components such as parabolic lighting, shelves and drawers to customize your bench.



UltraFrame Bench

- UltraFrame mobile workbenches make it possible to quickly and conveniently roll workstations from one area to another.
- They can be linked side by side or back to back, creating double-sided workstations. Adding stations is done with a minimum of downtime.



Height Adjustable Tables

- Choose from three height adjustable table lines.
- Electric and pin-adjustable models support loads from 750-1,000 pounds, evenly distributed.
- Tables have two travel ranges, 15" and 18", and are available with casters or glides.
- Tables with 15" travel range are ETL recognized.
- Add a surface accessory bracket, a plug strip, bin rail or cable tray above or below the work surface to maximize your workflow.





UltraFrame Lab System

- The UltraFrame series is commonly used in a variety of Lab applications.
- The system can be configured side-by-side or back-to-back, creating double-sided workstations with components adjustable in 1" increments.
- Shelving, electrical and data distributors along with mobile or stationary base cabinets are typical examples of accessories found in these areas.

Mobile Carts

- Mobile carts provide both storage and mobility for small to medium-sized components and products, tools and hardware.
- Shelves and rails hold Totes and Subcontainers in a wide variety of sizes.



Online or printed samples may vary depending on your monitor and printer. To request an actual sample please contact your sales representative.

Standard Paint Finish

High-efficiency powder paint system produces a consistent coverage and finish. This supports Symbiote's sustainable practices, producing no VOCs and hazardous emissions. Finishes are checked to guarantee quality and color validity.


Arctic White **AW**


Argent Silver **AS**


Black **BK**

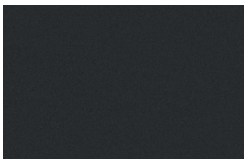
Black Texture **BT**

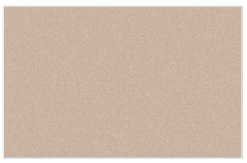
Sand Texture **ST**


Grey Light Smooth **GL**


Grey Light Texture **GT**

Neutral White **NW**

Standard Laminate

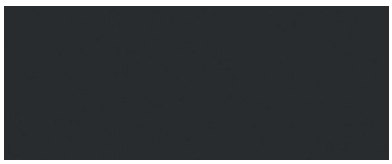
Black BK

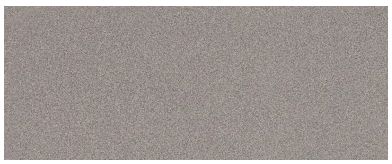
Grey Fleck **GF**


Grey Light **GL**

Neutral White NW


Sand **SA**


White Fleck WF

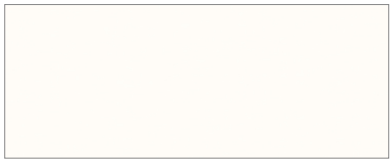
Arctic White AW

Rev 06.20.24

Online or printed samples may vary depending on your monitor and printer. To request an actual sample please contact your sales representative.

Fabrics

Fabrics for tackboards is a program in alliance with Gilford of Maine. Customer own material (COM) available.

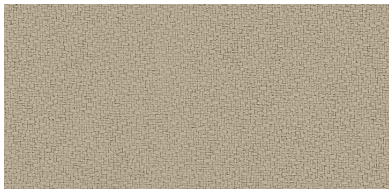
Angora **A2035**

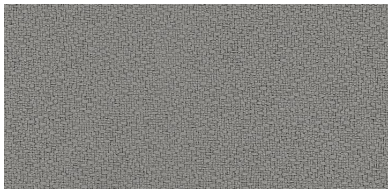
Asteroid **A2053**

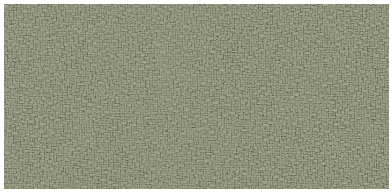
Eucalyptus **A2047**

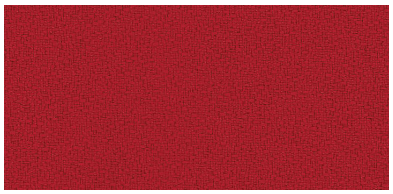
Geranium **A2084**

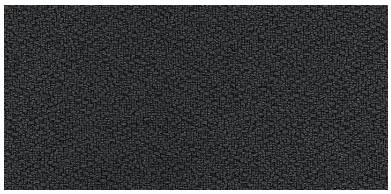
Graphite **A2079**

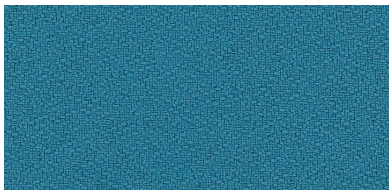
Waterfall **A2691**

Chemsurf Laminate

Chemical resistant laminate.


Black **CBK**


Grey Light **CGL**

Neutral White **CNW**

Epoxy and Phenolic

Lab grade chemical resistant resin.


Black **BK**

Dissipative Laminate

High-performance composite to protect sensitive electronic applications.


Black **DBK**


Grey Light **DG**

Neutral White **DNW**


White **DW**

Rev 11.23.26

LIMITED WARRANTY

SYMBIOTE, INC., a Michigan corporation ("Symbiote") warrants its standard and non-standard products to be free of defects in material and workmanship from the date of initial delivery for the applicable warranty period specified below. This warranty is made by Symbiote to the original purchaser ("Purchaser") acquiring the product for its own use, and not for resale, directly from Symbiote or its authorized dealer or distributor. This warranty is not transferable. "Standard products" are those items offered in any Symbiote catalog published on Symbiote's website as in effect on the date of sale. "Non-standard products" are products that are sold by Symbiote but are not offered in Symbiote's catalog, including custom and alternative products. Lamps and other consumables are not considered standard or non-standard products and are excluded from this warranty.

Warranty Periods

The warranty periods applicable to Symbiote's products under this Warranty are as follows:

- 15 years, Seating, unlimited on the pneumatic cylinder
- 12 years, Standard Products
- 5 years, Electric Height Adjustable Tables
- 2 years, Task Lighting
- 1 year, ESD Laminate
- 1 year, Special / Custom Product

Pass-Through Products - manufacturer's warranty

Exclusive Remedies

If during the first year of the applicable warranty period Purchaser notifies Symbiote in writing of an alleged product defect covered by this warranty, and if Symbiote confirms the product is defective, then as Purchaser's exclusive remedy Symbiote will repair or replace the defective product, at Symbiote's option and expense, including labor and materials, F.O.B. Symbiote's plant. If during the remainder of the applicable warranty period (that is, after year one) Purchaser notifies Symbiote in writing of an alleged product defect covered by this warranty, and if Symbiote confirms the product is defective, then as Purchaser's exclusive remedy Symbiote will furnish Purchaser with parts and materials (but not labor) necessary to repair the defect, F.O.B. Symbiote's plant. Symbiote will determine whether to require Purchaser to return defective product to Symbiote. If such a return is required, Purchaser will return the defective product to Symbiote's plant with all costs prepaid by Purchaser. Repaired or replaced product will be returned to Purchaser at Symbiote's expense. Symbiote may require Purchaser to establish the product was installed and used according to Symbiote's published instructions and is within the applicable warranty period by producing invoices or such other evidence as Symbiote may reasonably request.

Limitations and Exclusions

Symbiote has no obligation to make repairs, replacements or corrections that are required, in whole or in part, as the result of (i) failure to install and use product in accordance with Symbiote's published instructions and notes appearing on customer sign-off drawings provided to Purchaser, (ii) accident, disaster or force majeure, (iii) abuse, neglect, misuse, fault or negligence of persons other than Symbiote, including without limitation any installer engaged by Symbiote's dealer, distributor or representative (iv) exposure of product to extreme environmental conditions, (v) improper handling or storage of product, (vi) normal wear and tear, (vii) use of product in combination with equipment, components, replacement parts or software not supplied by Symbiote, (viii) alterations, repairs or installations of product that have not been performed by Symbiote or a person Symbiote has expressly authorized to perform the same on Symbiote's behalf as its employee or agent, (ix) the use of non-standard materials selected by, provided by or used at the express request of Purchaser, or (x) design defects in product. Because of natural variations over which Symbiote has no control, Symbiote does not

warrant matching of color, grain or texture of materials or finishes. This warranty applies only to products manufactured by Symbiote. Notwithstanding any contrary provision in this warranty, components purchased and resold without further processing by Symbiote are not covered by this warranty, but Symbiote will pass on to Purchaser whatever warranty Symbiote receives from the manufacturer of such goods.

EXCEPT AS STATED ABOVE, SYMBIOTE DOES NOT MAKE A WARRANTY AS TO ANY PRODUCT OR GOODS AND, IN PARTICULAR, DOES NOT MAKE A WARRANTY OF MERCHANTABILITY OR OF FITNESS FOR A PARTICULAR PURPOSE. Product repair or replacement, at Symbiote's option, in accordance with this warranty, is Purchaser's exclusive remedy for a product defect. Symbiote has no tort liability with respect to a product. Symbiote is not liable for any consequential, economic, indirect, special, punitive or incidental damages arising from a product defect. No dealer, distributor, reseller or sales representative of Symbiote's products is authorized to bind Symbiote to any warranty or representation except as stated above.

CONTRACT TERMS

All quotations, proposals, or similar communications from Symbiote are considered "invitations to contract." Any order placed by a customer must be in the form of a written purchase order and shall be considered an "offer." A written acknowledgment of an order by Symbiote shall be considered an "acceptance" which, when mailed, emailed or faxed to the customer, shall then result in a binding sales contract of which these Contract Terms shall be a part. Acceptances may be made only at Symbiote's home office in Zeeland, Michigan, and all sales contracts shall be made pursuant to and controlled by the laws of the State of Michigan. Notwithstanding any inconsistent or contrary term which may appear on a customer's purchase order, Symbiote's products are sold only upon these Contract Terms.

Prices

Published pricing is U. S. dollars. Unless otherwise stated in Symbiote's acknowledgment, all prices are F.O.B. Symbiote's factory, Zeeland, Michigan, or F.O.B. Symbiote's supplier or fulfillment location, as applicable, and do not include freight, storage, handling, uncrating or installation charges. Upon request Symbiote will provide estimated freight charges F.O.B. destination. Prices do not include sales, use, excise or any other taxes or assessments which may be applicable to the sale. Symbiote reserves the right to make changes in pricing without notice.

Ordering Information

A minimum Deposit of 35% is required on all orders placed with SYMBIOTE, INC. for orders with a quoted list price of $50,000 and higher. For orders above $250,000 further discussions on the deposit amount will be needed, unless an active contract governing down payment is currently in place. Deposit is due at the time of order entry unless written consent is agreed upon in advance. Payment can be made via standard check or through ACH payment, information available upon request. All orders must be in writing to avoid error and/or duplication. Order all products by their complete product number. Specify quantity, product number, product description, finish option and any other specifying information requested. Submit orders via email, conventional mail or fax on your purchase order form. Acknowledgments are issued within five working days of acceptance of the order with an approximate ship date of the product ordered.

Taxes

In addition to the purchase price, the customer is liable for all sales, use and excise taxes and/or other governmental charges imposed in respect of the sale, delivery or installation of the products being purchased by the customer (except taxes on or measured by net income of Symbiote), including those which Symbiote may be required to pay, except where the law otherwise provides. Unless otherwise specified in Symbiote's acknowledgment, the customer shall pay all such taxes directly to the appropriate taxing authorities.

Payment

The payment terms contained in this paragraph apply only to customers whose credit has been approved by Symbiote. For purchases of standard products, Symbiote offers a one percent (1%) discount off the purchase price (excluding charges for freight, storage, handling, uncrating, installation and taxes) for full payments made in readily available funds (and not by credit card), within ten (10) days after the invoice date. All payments are due within thirty (30) days after the invoice date. Beginning thirty (30) days after the invoice date, the customer shall pay a late payment charge of one and one-half percent (1.5%) per month on any unpaid portion of the purchase price shown on the invoice. Symbiote accepts Visa, Mastercard, and American Express credit cards as a payment option up to $5,000. Credit card payments are subject to a 5% credit card surcharge. They are not considered "readily available funds" for purpose of the discounts described above. Symbiote reserves the right to revoke or modify these credit terms at any time. See Ordering information (Page 1.9) for down payment requirements.

Retention of Title; Security Interest

Symbiote shall retain title to the products, any replacements thereof, and any additions thereto, for purpose of securing payment of the purchase price and related charges. Title shall not pass to the customer until the purchase price and all sums due hereunder are fully paid. Symbiote is authorized to file a financing statement and other documents necessary to enable Symbiote to place third parties on notice of its title to the products.

Shipment

Freight bills for orders shipped F.O.B. Zeeland, MI, or F.O.B. Symbiote's supplier or fulfillment location will be directly sent from the carrier to Purchaser for direct payment by Purchaser. Orders shipped F.O.B. destination have freight included in the invoice. Special shipping costs, if specified by Purchaser, are the responsibility of Purchaser. Any shipping date shown on the acknowledgment represents Symbiote's best estimate as of the date of acknowledgment. However, Symbiote shall not incur any liability of any kind for failure to ship on any particular date unless a firm shipping date has been expressly agreed to by an officer of Symbiote in a separately signed written instrument. Responsibility for the product and risk of loss shall pass to Purchaser when the product is placed in the possession of a common carrier. Claims against the carrier shall be the responsibility of Purchaser. Claims against Symbiote for apparent defects, errors or shortages must be made in writing to Symbiote within thirty (30) days of receipt of the product, or such claims shall be considered waived and the product accepted as delivered. If Purchaser claims the product delivered is non-conforming, Purchaser shall afford Symbiote prompt and reasonable opportunity to inspect the product. Symbiote's liability for non-conforming product shall be limited to repair or replacement of such product or allowance of credit for such product, at Symbiote's option. If Symbiote and the customer are unable to reach settlement of any claim relating to product, the customer must institute legal action against Symbiote within one (1) year after such claim arises and thereafter all such claims shall be barred, notwithstanding any statutory period of limitations to the contrary.

Selection of Goods

The selection of particular models, styles, colors, fabrics and specifications of product and the suitability thereof for the customer's specific application are the sole responsibility of the customer.

Delays and Change Orders

After the date an order from the customer is acknowledged by Symbiote, the customer may not change the order, in whole or in part, without Symbiote's written approval. All changes must be requested in writing. Where a proposed change would necessitate delays in shipment, Symbiote may condition its approval upon a price change to reflect Symbiote's prevailing prices at the time of such delayed shipment. Orders for non-standard products, including without limitation products with nonstandard finishes, are not subject to change.

Symbiote is not responsible for delays in shipment due to customer-requested changes to an order.

Storage

If the customer requests a delay in shipment after the product has become work in process, Symbiote may place the finished product in storage at the customer's risk and expense, and transfer to storage shall be considered delivery for all purposes, including invoicing and payment.

Cancellation

After the date an order from the customer is acknowledged by Symbiote, the customer may not cancel the order without Symbiote's written approval. All cancellations must be requested in writing. Symbiote's approval of cancellation shall be conditioned on the customer's payment of a cancellation charge of fifteen percent (15%) of the total purchase price and reimbursement of costs incurred by Symbiote prior to such approval, including engineering, testing, material costs, labor and burden and similar expenses in connection with the order cancelled. Orders for non-standard products, including without limitation products with nonstandard finishes, are not subject to cancellation.

Returns

The customer may not return product without Symbiote's written approval. Returns must be requested within 90 days of the original shipment. Symbiote's approval of returns shall be conditioned on the product being returned to Symbiote (i) in compliance with Symbiote's shipping instructions, (ii) within 90 days of the issuance of Symbiote's RGA (Returned Goods Authorization) number, (iii) with all return shipping charges being prepaid by customer, (iv) in a suitable condition for resale, and (v) with the customer's payment of a restocking charge of fifteen percent (15%) of the total purchase price. Symbiote will charge the customer for repairs to returned product at customary rates. Non-standard products, including without limitation, products with nonstandard finishes, are not subject to return.

Damage Limitation

The liability of Symbiote arising out of the sale or use of the product, whether based on negligence, breach of contract, strict liability or otherwise, shall not in any event exceed the original purchase price of the product. Under no circumstances shall Symbiote be liable for any lost profits or any incidental or consequential damages of any kind with respect to its products or the transactions by which its products are sold.

Excuse

In no event shall Symbiote be liable for any loss or damage resulting from any delay or failure in shipment or other failure to perform with respect to the products where such delay, failure, loss or damage is the proximate result of any act of any governmental authority, revolution, riot, civil disorder or disturbance, act of enemies, delay or default in transportation, strike, dispute among or between labor unions or other labor disputes, inability to obtain materials or facilities from normal sources, fire, flood, act of God or any cause not within the reasonable control of Symbiote, whether of the class of causes enumerated or otherwise. Without limiting the generality of the foregoing, Symbiote may, without causing a breach or incurring liability, allocate products which are in short supply for any reason among customers in any manner which Symbiote in its sole discretion considers advisable.

Modification

These contract terms can be modified only by a written instrument signed by Symbiote.

Infringement

If any product sold by Symbiote is to be manufactured according to the customer's specifications, the customer shall indemnify Symbiote against any claims or liability for patent or trademark infringement on account of such manufacture.

FRAMES AND CONNECTORS

UltraFrames. 2.2
UltraFrame Spines 2.4
UltraFrame Connector Posts. 2.5
Panel and Rigid Corner Connectors 2.6
Joiner Plates 2.7
Ultra Leg 2.8
A Leg Supports 2.9
Earthquake Glide Clips / Brackets 2.10
Panel End Covers 2.11
Footrests 2.12
Touch Up Paint 2.13

2

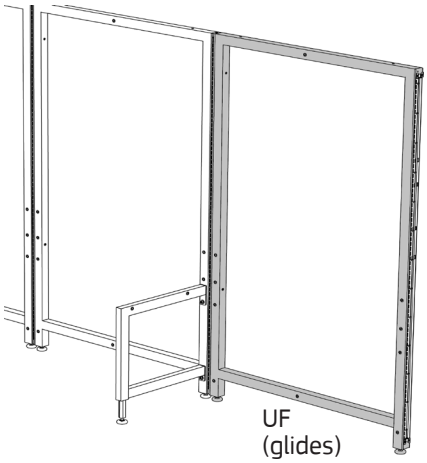

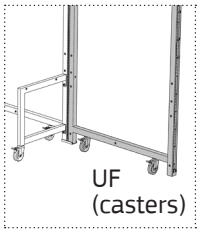

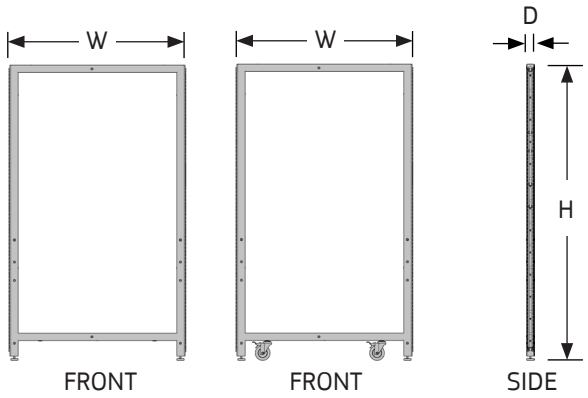

ULTRAFRAMES

- Open steel frames provide structural support for hanging components.
- Frames permit vertical adjustment of components in 1" increments.
- Frames attach to all frame styles of equal or unequal height.
- Equipped with attachment points for ESD grounding hardware.
- Frames with Glides: Load capacity 1,000 lbs. per side evenly distributed.
- Frames with Casters: Load capacity 500 lbs. per side evenly distributed. Includes two 4" diameter polypropylene casters with totalock brakes (simultaneously locks the swivel and wheel).

Structural Support Requirements

- Ultra Legs, A Legs and Lab Legs available. Sold separately; see pages 2.8-2.9 and Section 10, respectively.
- Frames on Casters require Joiner Plates for structural support when connected with Panel Connectors, Connector Posts or Corner Connectors. Sold separately; see page 2.7.

Cable Management: 80" High Frame

- Attachment points for horizontal top mounting of Cable Ring Ducts and Cable Ducts Top Mount. Inserts are spaced to accommodate products with the same width as the frames.
- Attachment points for vertical inside mounting of Cable Ducts Frame Mount, Cable Ring Ducts and Plug Strips.
- Can accommodate a 48" component on each side of the inside face of the frame.

NOTES

» Attach multiple frames with Panel Connectors, Corner Connectors or Connector Posts. Sold separately; see pages 2.5-2.6.

» 48" and 60" wide frames can be divided with UltraFrame Spines. Sold separately; see page 2.4.

» Optional Panel End Covers can be ordered to finish exposed hardware. Sold separately; see page 2.10.

How to Specify

Step 1. Product Number

UF

Step 2. Height

48 48" height **62** 62" height **80** 80" height

Step 3. Width

24 24" wide **30** 30" wide **36** 36" wide
48 48" wide **60** 60" wide

Step 4. Casters (if required)

C5 Totalock Casters

Step 5. Paint Color Code

STANDARD

AW Arctic White
AS Argent Silver
BK Black
BT Black Texture
GL Grey Light Smooth
GT Grey Light Texture
NW Neutral White
ST Sand Texture

ULTRAFRAME *(Cont'd)*

Product Number	Description	Height		Width		Depth		Weight	
		in.	[mm]	in.	[mm]	in.	[mm]	lb.	[kg]
UF4824	Glides	48	1219	24	610	2	51	36	16.3
UF4830	Glides	48	1219	30	762	2	51	39	17.7
UF4836	Glides	48	1219	36	914	2	51	42	19.1
UF4848	Glides	48	1219	48	1219	2	51	46	20.9
UF4860	Glides	48	1219	60	1524	2	51	52	23.6
UF6224	Glides	62	1575	24	610	2	51	43	19.5
UF6230	Glides	62	1575	30	762	2	51	46	20.9
UF6236	Glides	62	1575	36	914	2	51	49	22.2
UF6248	Glides	62	1575	48	1219	2	51	54	24.5
UF6260	Glides	62	1575	60	1524	2	51	59	26.8
UF8024	Glides	80	2032	24	610	2	51	52	23.6
UF8030	Glides	80	2032	30	762	2	51	54	24.5
UF8036	Glides	80	2032	36	914	2	51	57	25.9
UF8048	Glides	80	2032	48	1219	2	51	62	28.1
UF8060	Glides	80	2032	60	1524	2	51	67	30.4
UF4824C5	Casters	48	1219	24	610	2	51	36	16.3
UF4830C5	Casters	48	1219	30	762	2	51	39	17.7
UF4836C5	Casters	48	1219	36	914	2	51	42	19.1
UF4848C5	Casters	48	1219	48	1219	2	51	46	20.9
UF4860C5	Casters	48	1219	60	1524	2	51	52	23.6
UF6224C5	Casters	62	1575	24	610	2	51	47	21.3
UF6230C5	Casters	62	1575	30	762	2	51	50	22.7
UF6236C5	Casters	62	1575	36	914	2	51	53	24.0
UF6248C5	Casters	62	1575	48	1219	2	51	58	26.3
UF6260C5	Casters	62	1575	60	1524	2	51	63	28.6
UF8024C5	Casters	80	2032	24	610	2	51	56	25.4
UF8030C5	Casters	80	2032	30	762	2	51	58	26.3
UF8036C5	Casters	80	2032	36	914	2	51	61	27.7
UF8048C5	Casters	80	2032	48	1219	2	51	66	29.9
UF8060C5	Casters	80	2032	60	1524	2	51	71	32.2

Rev 01/06/21



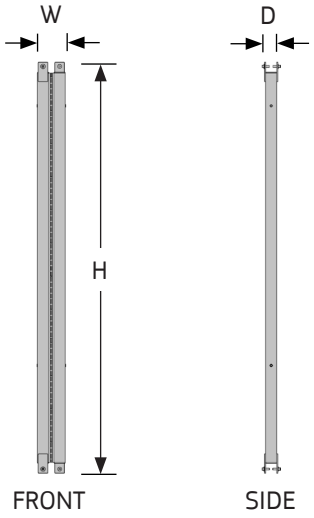

ULTRAFRAME SPINES

- UltraFrame Spines divide 48" and 60" wide UltraFrames into two smaller sections.
- Spines permit vertical adjustment of components in 1" increments and provide attachment points for ESD grounding hardware.
- Sold as a pair, UltraFrame Spines bolt to top and bottom connection points on UltraFrames.
- 80" high UltraFrame Spines feature ¼"-20 threaded inserts for vertical inside mounting of Cable Ducts Frame Mount, Cable Ring Ducts and Plug Strips. The pair of spines accommodate two 48" components.

NOTES

» 48" wide frames divide into two 24" sections.
» 60" wide frames divide into two 30" sections or a 24" and 36" section.
» UltraFrame Spines do not attach to ErgoStat Riser Frames.

How to Specify

Step 1. Product Number

FS

Step 2. Height

48 48" height **62** 62" height **80** 80" height

Step 3. Paint Color Code

STANDARD

AW Arctic White
AS Argent Silver
BK Black
BT Black Texture
GL Grey Light Smooth
GT Grey Light Texture
NW Neutral White
ST Sand Texture

Product Number	Description	Height		Width		Depth		Weight	
		in.	[mm]	in.	[mm]	in.	[mm]	lb.	[kg]
FS48	Frame spine	40 ½	1029	5	127	2	51	22	10.0
FS62	Frame spine	54 ½	1384	5	127	2	51	29	13.2
FS80	Frame spine	72 ½	1842	5	127	2	51	38	17.2

Rev 04/01/19

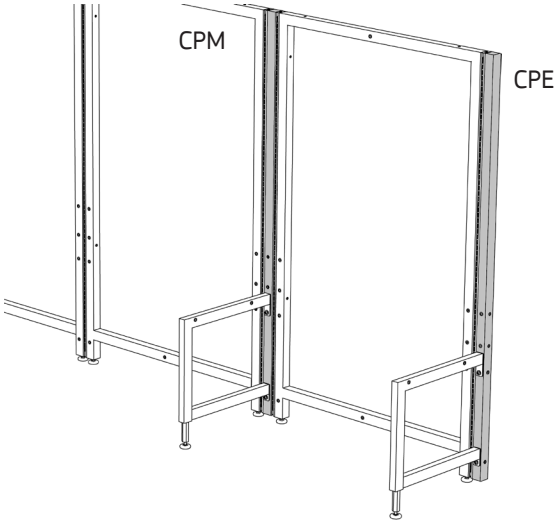

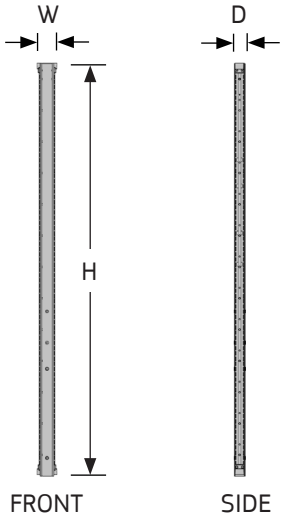

ULTRAFRAME CONNECTOR POSTS

- Connector Posts provide panel support outside the boundaries of UltraFrames.
- Posts attach to UltraFrames of the same height without Panel Connectors.
- A Legs and Ultra Legs bolt to both the front and back sides of 48", 62" and 80" high Connector Posts.

NOTES

» Optional Mid End Covers can be ordered to trim the exposed hardware of Mid Connector Posts when used at the end of Panel runs. Order separately; see page 2.10.

» Frames on Casters require Joiner Plates. Sold separately; see page 2.7.

» Connector Posts add additional length to a run of frames.

How to Specify

Step 1. Product Number

CPE Connector Post End
CPM Connector Post Mid

Step 2. Height

48 48" height **62** 62" height **80** 80" height

Step 3. Paint Color Code

STANDARD

AW Arctic White
AS Argent Silver
BK Black
BT Black Texture
GL Grey Light Smooth
GT Grey Light Texture
NW Neutral White
ST Sand Texture

Product Number	Description	Height		Width		Depth		Weight	
		in.	[mm]	in.	[mm]	in.	[mm]	lb.	[kg]
CPE48	End	48	1219	2 ½	64	2	51	17	7.7
CPE62	End	62	1575	2 ½	64	2	51	22	10.0
CPE80	End	80	2032	2 ½	64	2	51	27	12.2
CPM48	Mid	48	1219	3	76	2	51	17	7.7
CPM62	Mid	60	1524	3	76	2	51	22	10.0
CPM80	Mid	80	2032	3	76	2	51	27	12.2

Rev 11/23/26

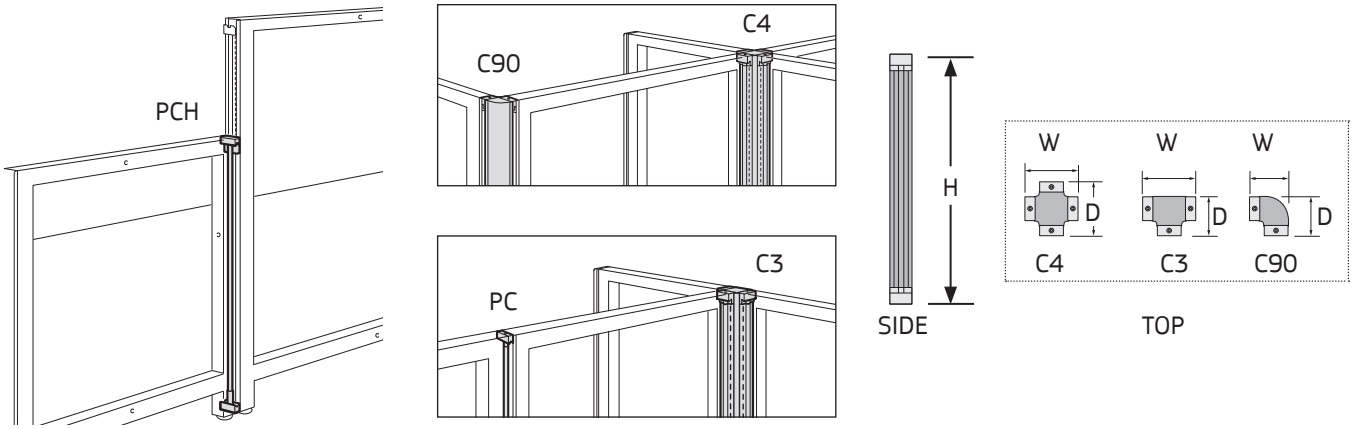

PANEL AND RIGID CORNER CONNECTORS

Panel Connectors

- Panel Connectors attach adjacent UltraFrames of equal height in straight lines.
- Order connectors to match the height of the frames.
- Finish is Black.

Height Change Panel Connectors

- Height Change Panel Connectors attach adjacent UltraFrames of unequal height in straight lines.
- Order connectors to match the height of the shorter frames. For example, 80" high frames connecting to 62" high frames require 62" Height Change Panel Connectors.
- Finish is Black.

NOTES

» Variable Height End Covers are required to trim the exposed side of the taller frames or connectors when attaching frames or connectors of lesser heights. Order separately; see page 2.10.

» Corner Connectors add additional length to a run of frames. Panel Connectors add no additional length.

How to Specify

Step 1. Product Number

PC	Panel Connector
PCH	Height Change
C3	Corner Connector, three-way
C4	Corner Connector, four-way
C90	Corner Connector, two-way

Step 2. Height

48	48" high *(excludes C3 and C4)*
62	62" high
80	80" high

Step 3. Paint Color Code (excludes PC, PCH)

STANDARD

AW	Arctic White	**GL**	Grey Light Smooth
AS	Argent Silver	**GT**	Grey Light Texture
BK	Black	**NW**	Neutral White
BT	Black Texture	**ST**	Sand Texture

Product Number	Description	Height		Width		Depth		Weight	
		in.	[mm]	in.	[mm]	in.	[mm]	lb.	[kg]
PC48	Panel connector	48	1219					1	0.5
PC62	Panel connector	62	1575					1	0.5
PC80	Panel connector	80	2032					2	0.9
PCH48	Height change panel connector	48	1219					1	0.5
PCH62	Height change panel connector	62	1575					1	0.5
PCH80	Height change panel connector	80	2032					2	0.9
C9048	Two-way corner connector	48	1219	2 ¾	70	2 ¾	70	6	2.7
C9062	Two-way corner connector	62	1575	2 ¾	70	2 ¾	70	8	3.6
C9080	Two-way corner connector	80	2032	2 ¾	70	2 ¾	70	10	4.5
C362	Three-way corner connector	62	1575	3 ½	89	2 ¾	89	11	5.0
C380	Three-way corner connector	80	2032	3 ½	89	2 ¾	89	13	5.9
C462	Four-way corner connector	62	1575	3 ½	89	3 ½	89	11	5.0
C480	Four-way corner connector	80	2032	3 ½	89	3 ½	89	11	5.0

Rev 11/23/26

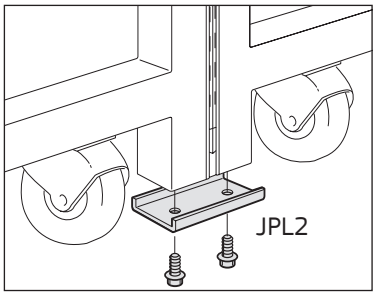

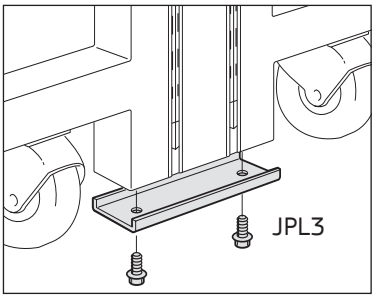

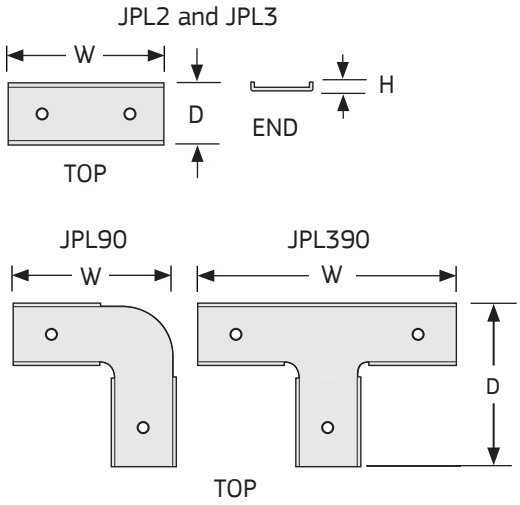

JOINER PLATES

- Joiner Plates provide structural support for UltraFrames with Casters when connected with Panel Connectors, Connector Posts or Corner Connectors.
- Steel plates bolt to the bottom of frames and Connector Posts in place of the glides.
- Finish is Black.

How to Specify

Step 1. Product Number

JPL2	Frame/Frame
JPL390	Three-Way Corner
JPL3	Frame/Post/Frame
JPL90	Two-Way Corner

Step 2. Paint Color Code

BK Black

Product Number	Description	Height		Width		Depth		Weight	
		in.	[mm]	in.	[mm]	in.	[mm]	lb.	[kg]
JPL2BK	Frame/frame	¾	19	5	127	2	51	0.3	0.1
JPL390BK	Three-way corner	¾	19	8	203	2	51	0.5	0.2
JPL3BK	Frame/post/frame	¾	19	5 ¼	133	5 ¼	133	0.5	0.2
JPL90BK	Two-way corner	¾	19	8 ½	216	5 ¼	133	0.5	0.2

Rev 11/02/10

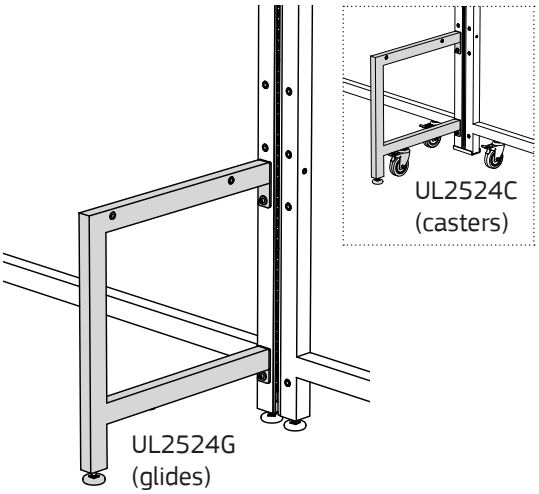

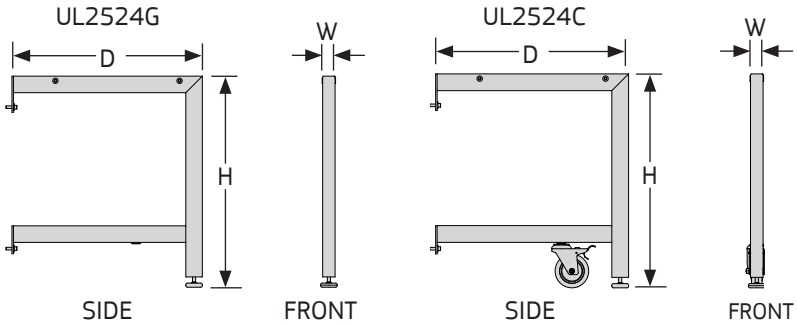

ULTRA LEG

- Ultra Legs provide (required) standing support for UltraFrames.
- Legs bolt to connection points on UltraFrames and Connector Posts.
- Equipped with a leveling glide or a 4" diameter polypropylene caster with totalock brake (simultaneously locks swivel and wheel). Ultra Legs with casters bolt to UltraFrames with Casters. Ultra Legs with glides bolt to UltraFrames with Glides and Connector Posts.
- Surface B Support Brackets fasten to either side of Ultra Legs for mounting surfaces. Surfaces sold separately; see section 4.

NOTES

» Do not use 24" deep Ultra Legs with 36" deep surfaces.

How to Specify

Step 1. Product Number

UL

Step 2. Height

25 25" high **30** 30" high

Step 3. Depth

24 24" deep **30** 30" deep

Step 4. Glides or Casters

C Casters **G** Glides

Step 5. Paint Color Code

STANDARD

AW Arctic White
AS Argent Silver
BK Black
BT Black Texture
GL Grey Light Smooth
GT Grey Light Texture
NW Neutral White
ST Sand Texture

Product Number	Description	Height		Width		Depth		Weight	
		in.	[mm]	in.	[mm]	in.	[mm]	lb.	[kg]
UL2524C	Caster	25 ½	648	1 ½	38	23	584	12	6
UL2524G	Glide	25 ½	648	1 ½	38	23	584	10	5
UL2530C	Caster	25 ½	648	1 ½	38	29	737	14	6
UL2530G	Glide	25 ½	648	1 ½	38	29	737	12	5
UL3024C	Caster	30 ½	775	1 ½	38	23	584	13	6
UL3024G	Glide	30 ½	775	1 ½	38	23	584	11	5
UL3030C	Caster	30 ½	775	1 ½	38	29	737	15	7
UL3030G	Glide	30 ½	775	1 ½	38	29	737	13	6

Rev 04/23/19

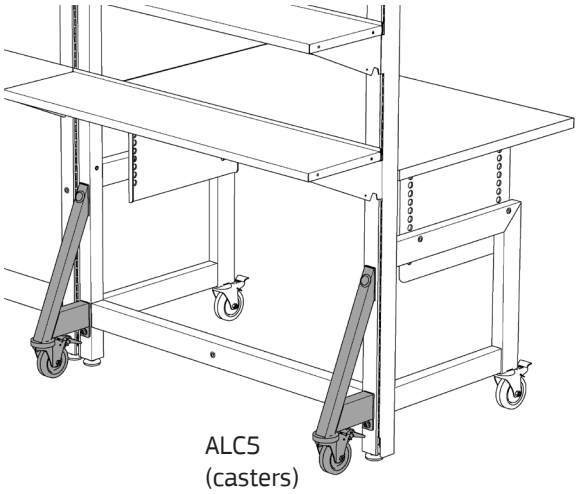

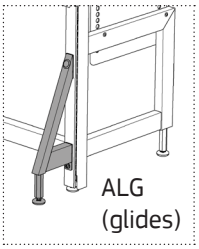

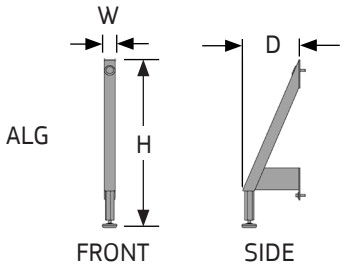

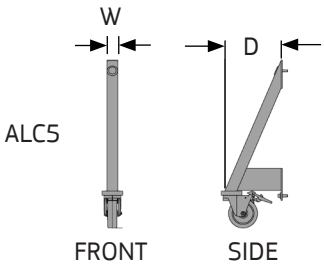

A LEG SUPPORTS

- A Legs provide light loading and stabilizing support for the back sides of workstations.
- Legs bolt to connection points on both the front and back sides of UltraFrames and Connector Posts.
- Equipped with a leveling glide or a 4" diameter polypropylene caster with totalock brake (simultaneously locks swivel and wheel).
- A Legs with Casters bolt to UltraFrames with Casters.
- A Legs with Glides bolt to UltraFrames with Glides and Connector Posts.

NOTES

» A Legs are used for supporting components 15" deep or less when mounted on the back sides of workstations.

How to Specify

Step 1. Product Number

ALG A Leg Support, Glide
ALC5 A Leg Support, Caster

Step 2. Paint Color Code

STANDARD

AW Arctic White
AS Argent Silver
BK Black
BT Black Texture
GL Grey Light Smooth
GT Grey Light Texture
NW Neutral White
ST Sand Texture

Product Number	Description	Height		Width		Depth		Weight	
		in.	[mm]	in.	[mm]	in.	[mm]	lb.	[kg]
ALG	Glide	23	584	1 ½	38	8	203	6	2.7
ALC5	Caster	23	584	1 ½	38	8	203	8	3.6

Rev 04/01/19

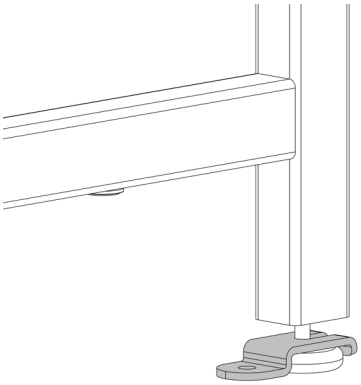

EQGBK

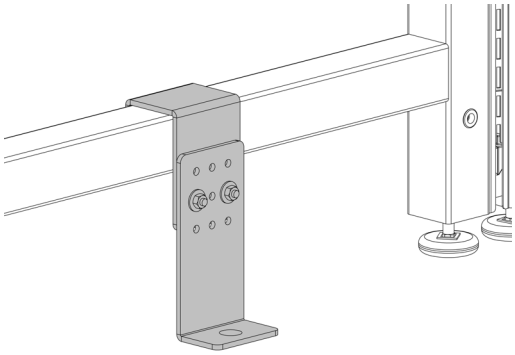

EQBUF

EARTHQUAKE GLIDE CLIPS / BRACKETS

- Earthquake Glide Clips (EQGBK) are mounted over the glides of UltraFrames, Ultra Legs, ErgoStats, Table Bases, Work Tables and Tetrad Tables. Specify one EQGBK per glide.
- Earthquake Glide Brackets (EQBUF) are mounted over the lower cross-tubes of UltraFrames and Ultra Legs.
- Sold individually.
- Finish is Black for EQGBK. EQBUF is color matched.

NOTES

» The EQGBK and EQBUF need to be secured to the floor structure using the appropriate fasteners as defined/required by local code.

How to Specify

Step 1. Product Number

EQGBK
EQBUF

Step 2. Paint Color Code (EQBUF only)

AW	Arctic White	**GL**	Grey Light Smooth
AS	Argent Silver	**GT**	Grey Light Texture
BK	Black	**NW**	Neutral White
BT	Black Texture	**ST**	Sand Texture

Product Number	Description	Height in. Min.	Height in. Max.	Height [mm] Min.	Height [mm] Max.	Width in.	Width [mm]	Depth in.	Depth [mm]	Weight lb.	Weight [kg]
EQGBK	Glide Clip	0.690		17.526		1.500	38.100	3.916	99.458	0.292	0.132
EQBUF	Bracket, UltraFrame	6.929	8.929	175.986	226.786	3.000	76.200	4.348	110.437	2.359	1.070

Rev 09/09/25

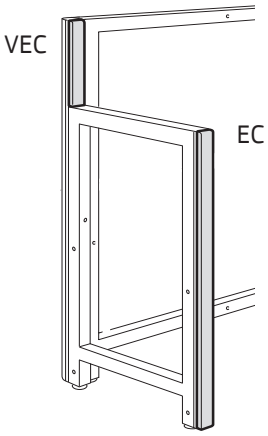

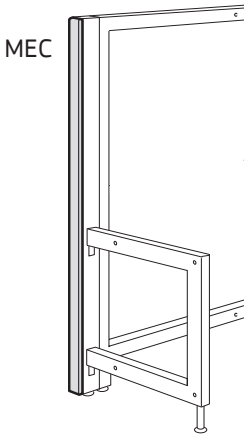

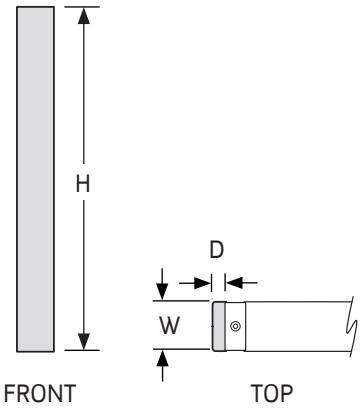

PANEL END COVERS

Panel End Covers

- Metal Panel End Covers finish exposed hardware on the ends of UltraFrames.

Mid End Covers

- Metal Mid End Covers finish exposed hardware on the ends of Mid Connector Posts and Vertical Distributors.

Variable Height End Covers

- Plastic Variable Height End Covers finish exposed hardware when connecting UltraFrames of unequal heights.
- Covers can be field cut to appropriate lengths.

NOTES

» ErgoStat Riser Frames require Riser Frame End Covers to finish exposing hardware; see page 3.5.

How to Specify

Step 1. Product Number

EC	Panel End Cover
MEC	Mid End Cover
VEC	Variable End Cover

Step 2. Height (Excludes Variable End Cover)

48 48" high **62** 62" high **80** 80" high

Step 3. Paint Color Code

Panel / Mid End Covers

STANDARD

AW	Arctic White	**GL**	Grey Light Smooth
AS	Argent Silver	**GT**	Grey Light Texture
BK	Black	**NW**	Neutral White
BT	Black Texture	**ST**	Sand Texture

Variable Height End Covers

BU	Black Umber
GL	Grey Light Smooth
NW	Neutral White

Product Number	Description	Height		Width		Depth		Weight	
		in.	[mm]	in.	[mm]	in.	[mm]	lb.	[kg]
EC48	Panel end cover	48	1219	2	51	½	13	3	1.4
EC62	Panel end cover	62	1575	2	51	½	13	4	1.8
EC80	Panel end cover	80	2032	2	51	½	13	5	2.3
MEC48	Mid end cover	48	1219	2	51	½	13	4	1.8
MEC62	Mid end cover	62	1575	2	51	½	13	5	2.3
MEC80	Mid end cover	80	2032	2	51	½	13	6	2.7
VEC	Variable height end cover	32	813	2	51	½	13	3	1.4

Rev 11/23/26

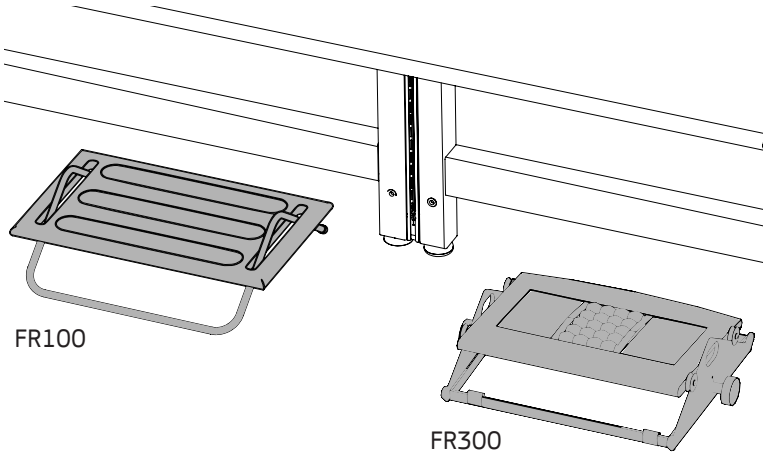

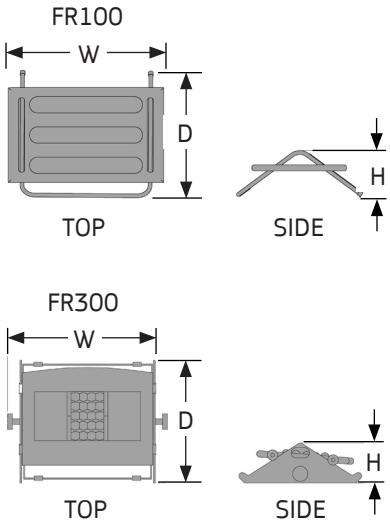

FOOTRESTS

- Portable Footrests support legs and feet when seated.
- Treadles move on the bases with light foot pressure, providing a 15° range of articulation.
- Foot treadles are black with chrome bases. Dissipative finish not available.

How to Specify

Step 1. Product Number

FR100 Tilting Footrest
FR300 Foot Machine

Product Number	Description	Height		Width		Depth		Weight	
		in.	[mm]	in.	[mm]	in.	[mm]	lb.	[kg]
FR100	Tilting footrest	3 ⅜	86	19	483	11 ¾	298	5	2.3
FR300	Foot machine	3 ¾	95	16	406	11 ¾	298	10	4.5

Rev 11/03/10



TOUCH UP PAINT

- 6 fluid ounce aerosol spray cans allow for color matched touch up of marred painted surfaces.
- Cans cannot be shipped via air transport.

How to Specify

Step 1. Product Number

TP

Step 3. Paint Color Code

AS	Argent Silver
AW	Arctic White
BK	Black
BT	Black Texture
GL	Grey Light
GT	Grey Light Texture
NW	Neutral White
ST	Sand Texture

Product Number	Description	Weight lb.	Weight [kg]
TPAS	Argent Silver	1	0.5
TPAW	Arctic White	1	0.5
TPBK	Black	1	0.5
TPBT	Black Texture	1	0.5
TPGL	Grey Light Smooth	1	0.5
TPGT	Grey Light Texture	1	0.5
TPNW	Neutral White	1	0.5
TPST	Sand Texture	1	0.5

Rev 09/20/17

TABLES

ErgoStat Base, Electric, 15" Travel Range 3.2
ErgoStat Base, Electric, 18" Travel Range 3.3
ErgoStat Base, Positionable, 15" Travel Range 3.4
ErgoStat Base, Positionable, 18" Travel Range 3.5
ErgoStat Riser Frame 3.6
ErgoStat Riser Spine + End Cover 3.7
WorkTable Base, Electric, 15" Travel Range 3.8
WorkTable Base, Electric, 18" Travel Range 3.9
WorkTable Base, Positionable, 15" Travel Range 3.10
WorkTable Base, Positionable, 18" Travel Range 3.11
Table Base, Electric, 15" Travel Range 3.12
Table Base, Electric, 18" Travel Range 3.13
Table Base, Electric, 15" Travel Range, 36" D. Surface 3.14
Table Base, Electric, 18" Travel Range, 36" D. Surface 3.15
Table Base, Positionable, 15" Travel Range 3.16
Table Base, Positionable, 18" Travel Range 3.17
Table Base, Positionable, 15" Travel Range, 36" D. Surface 3.18
Table Base, Positionable, 18" Travel Range, 36" D. Surface 3.19
ErgoStat Footrest 3.20
Lower Shelf 3.21
4-Legged Table, Glides 3.22
4-Legged Table, Casters 3.24
Symple Table Base, Electric, 26" Travel Range 3.26
Hand Control Switches - Electric Base 3.27
Lower Shelf, 4-Legged Table 3.28
Tetrad Table, C-Style 3.29
Tetrad Table, T-Style 3.30
Tetrad Table, Lower Shelf 3.32
Earthquake Glide Clips / Brackets 3.33

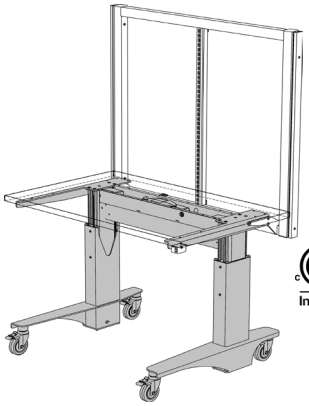

ESERC
(casters)



ESERG
(glides)

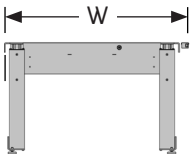

FRONT

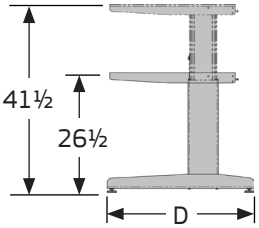

SIDE

ERGOSTAT BASE, ELECTRIC, 15" TRAVEL RANGE

- Use with a 30" or 36" D surface to construct a height adjustable bench.
- Optional attachable Riser Frame bolts to base to provide upright support for hanging components.
- The electrically driven self-guided aluminum assemblies have a 15" travel range from 26½" to 41½" to the underside of the surface, rising at ¼" per second.
- Bases require 120 Volt, 60 Hz. power. A hand control switch and a 9½' power cord are supplied. Amp draw: 4 Amps.
- Available with leveling glides or 4" polypropylene casters with totalock brakes (simultaneously locks the swivel and wheel).
- Gross dynamic load capacity 1,200 lbs. evenly distributed.
- Shipped fully assembled. Hand control switch is field installed.
- ETL recognized; conforms to UL Std. 962 and certified to CSA Std. C22.2 No. 68.

How to Specify

Step 1. Product Number

ESERG Glide Base, 15" Travel Range
ESERC Caster Base, 15" Travel Range

Step 2. Width

36 36" wide **48** 48" wide **60** 60" wide
72 72" wide **96** 96" wide

Step 3. Paint Color Code

STANDARD

AS Argent Silver
AW Arctic White
BK Black
BT Black Texture
GL Grey Light Smooth
GT Grey Light Texture
NW Neutral White
ST Sand Texture

NOTES

» Surfaces sold separately; see Section 4.0. Bases will not accommodate 24" deep surfaces.
» ErgoStat Riser Frame sold separately; see page 3.6.
» Optional Footrest and Lower Shelf sold separately; see pages 3.20 - 3.21.
» Travel range is measured from floor to bottom of surface.
» International electrical configuration available; consult factory.
» Hand control switch (Symbiote standard "J") is field installed. Optional styles available; see page 3.27.

Product Number	Description	Width		Depth		Weight	
		in.	[mm]	in.	[mm]	lb.	[kg]
ESERG36J	Electric, 15" travel range, glides	30	762	32 ⅛	816	83	37.6
ESERG48J	Electric, 15" travel range, glides	42	1067	32 ⅛	816	86	39.0
ESERG60J	Electric, 15" travel range, glides	54	1372	32 ⅛	816	90	40.8
ESERG72J	Electric, 15" travel range, glides	66	1676	32 ⅛	816	94	42.6
ESERG96J	Electric, 15" travel range, glides	90	2286	32 ⅛	816	101	45.8
ESERC36J	Electric, 15" travel range, casters	30	762	34 ⅛	867	126	57.2
ESERC48J	Electric, 15" travel range, casters	42	1067	34 ⅛	867	130	59.0
ESERC60J	Electric, 15" travel range, casters	54	1372	34 ⅛	867	133	60.3
ESERC72J	Electric, 15" travel range, casters	66	1676	34 ⅛	867	137	62.1
ESERC96J	Electric, 15" travel range, casters	90	2286	34 ⅛	867	144	65.3

Rev 11/23/26

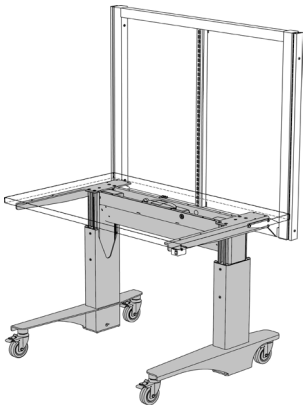

ESETC
(casters)



ESETG
(glides)

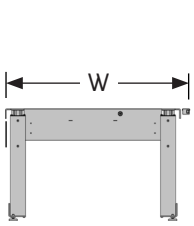

FRONT

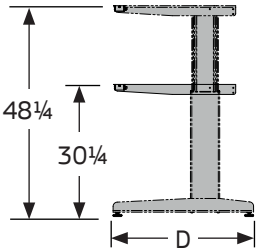

SIDE

ERGOSTAT BASE, ELECTRIC, 18" TRAVEL RANGE

- Use with a 30" or 36" deep surface to construct a height adjustable bench.
- Optional attachable Riser Frame bolts to base to provide upright support for hanging components. Sold separately; see page 3.6.
- The electrically driven self-guided aluminum assemblies have a 18" travel range from 30¼" to 48¼" to the underside of the surface, rising at ¼" per second.
- Bases require 120 Volt, 60 Hz. power. A hand control switch and a 9½' power cord are supplied. Amp draw: 4 Amps.
- Available with leveling glides or 4" polypropylene casters with totalock brakes (simultaneously locks the swivel and wheel).
- Gross dynamic load capacity 1,200 lbs. evenly distributed.
- Shipped fully assembled. Hand control switch is field installed.
- Uses ETL recognized components.

NOTES

» Surfaces sold separately; see Section 4.0. Bases will not accommodate 24" deep surfaces.
» ErgoStat Riser Frame sold separately; see page 3.6.
» Optional Footrest and Lower Shelf sold separately; see pages 3.20 - 3.21.
» Travel range is measured from floor to bottom of surface.
» International electrical configuration available; consult factory.
» Hand control switch (Symbiote standard "J") is field installed. Optional styles available; see page 3.27.

How to Specify

Step 1. Product Number

ESETG Glide Base, 18" Travel Range
ESETC Caster Base, 18" Travel Range

Step 2. Width

36 36" wide **48** 48" wide **60** 60" wide
72 72" wide **96** 96" wide

Step 3. Paint Color Code

STANDARD

AS Argent Silver
AW Arctic White
BK Black
BT Black Texture
GL Grey Light Smooth
GT Grey Light Texture
NW Neutral White
ST Sand Texture

Product Number	Description	Width		Depth		Weight	
		in.	[mm]	in.	[mm]	lb.	[kg]
ESETG36J	Electric, 18" travel range, glides	30	762	32 ⅛	816	90	40.8
ESETG48J	Electric, 18" travel range, glides	42	1067	32 ⅛	816	93	42.2
ESETG60J	Electric, 18" travel range, glides	54	1372	32 ⅛	816	97	44.0
ESETG72J	Electric, 18" travel range, glides	66	1676	32 ⅛	816	101	45.8
ESETG96J	Electric, 18" travel range, glides	90	2286	32 ⅛	816	108	49.0
ESETC36J	Electric, 18" travel range, casters	30	762	34 ⅛	867	133	60.3
ESETC48J	Electric, 18" travel range, casters	42	1067	34 ⅛	867	137	62.1
ESETC60J	Electric, 18" travel range, casters	54	1372	34 ⅛	867	140	63.5
ESETC72J	Electric, 18" travel range, casters	66	1676	34 ⅛	867	144	65.3
ESETC96J	Electric, 18" travel range, casters	90	2286	34 ⅛	867	151	68.5

Rev 11/23/26

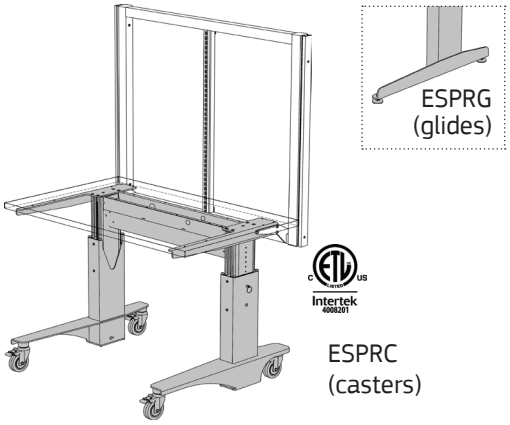

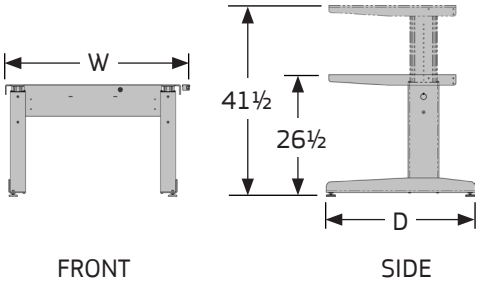

ERGOSTAT BASE, POSITIONABLE, 15" TRAVEL RANGE

- Use with a 30" or 36" deep surface to construct a height adjustable bench.
- Optional attachable Riser Frame bolts to base to provide upright support for hanging components.
- The self-guided aluminum assemblies have a 15" travel range from 26½" to 41½" to the underside of the surface. Bases adjust in 1" increments with threaded fasteners.
- Available with leveling glides or 4" polypropylene casters with totalock brakes (simultaneously locks the swivel and wheel).
- Load capacity 1,200 lbs. evenly distributed.
- Shipped fully assembled.
- ETL recognized; conforms to UL Std. 962 and certified to CSA Std. C22.2 No. 68.

NOTES

» Surfaces sold separately; see Section 4.0. Bases will not accommodate 24" deep surfaces.
» ErgoStat Riser Frame sold separately; see page 3.6.
» Optional Footrest and Lower Shelf sold separately; see pages 3.20 - 3.21.
» Travel range is measured from floor to bottom of surface.

How to Specify

Step 1. Product Number

ESPRG Glide Base, 15" Travel Range
ESPRC Caster Base, 15" Travel Range

Step 2. Width

36 36" wide **48** 48" wide **60** 60" wide
72 72" wide **96** 96" wide

Step 3. Paint Color Code

STANDARD

AS Argent Silver
AW Arctic White
BK Black
BT Black Texture
GL Grey Light Smooth
GT Grey Light Texture
NW Neutral White
ST Sand Texture

Product Number	Description	Width		Depth		Weight	
		in.	[mm]	in.	[mm]	lb.	[kg]
ESPRG36W	Positionable, 15" travel range, glides	30	762	32 ⅛	816	68	30.8
ESPRG48W	Positionable, 15" travel range, glides	42	1067	32 ⅛	816	71	32.2
ESPRG60W	Positionable, 15" travel range, glides	54	1372	32 ⅛	816	75	34.0
ESPRG72W	Positionable, 15" travel range, glides	66	1676	32 ⅛	816	78	35.4
ESPRG96W	Positionable, 15" travel range, glides	90	2286	32 ⅛	816	85	38.6
ESPRC36W	Positionable, 15" travel range, casters	30	762	34 ⅛	867	111	50.3
ESPRC48W	Positionable, 15" travel range, casters	42	1067	34 ⅛	867	115	52.2
ESPRC60W	Positionable, 15" travel range, casters	54	1372	34 ⅛	867	119	54.0
ESPRC72W	Positionable, 15" travel range, casters	66	1676	34 ⅛	867	122	55.3
ESPRC96W	Positionable, 15" travel range, casters	90	2286	34 ⅛	867	129	58.5

Rev 11/23/26

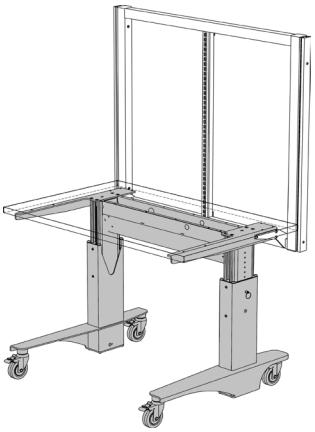

ESPTC
(casters)



ESPTG
(glides)

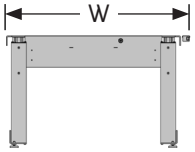

FRONT

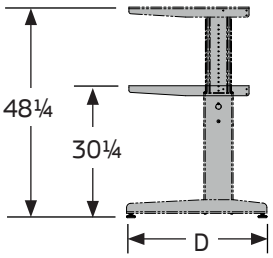

SIDE

ERGOSTAT BASE, POSITIONABLE, 18" TRAVEL RANGE

- Use with a 30" or 36" deep surface to construct a height adjustable bench.
- Optional attachable Riser Frame bolts to base to provide upright support for hanging components.
- The self-guided aluminum assemblies have a 18" travel range from 30¼" to 48¼" to the underside of the surface. Bases adjust in 1" increments with pin-adjustable fasteners.
- Available with leveling glides or 4" polypropylene casters with totalock brakes (simultaneously locks the swivel and wheel).
- Load capacity 1,200 lbs. evenly distributed.
- Shipped fully assembled.

NOTES

» Surfaces sold separately; see Section 4.0. Bases will not accommodate 24" deep surfaces.
» ErgoStat Riser Frame sold separately; see page 3.6.
» Optional Footrest and Lower Shelf sold separately; see pages 3.20 - 3.21.
» Travel range is measured from floor to bottom of surface.

How to Specify

Step 1. Product Number

ESPTG Glide Base, 18" Travel Range
ESPTC Caster Base, 18" Travel Range

Step 2. Width

36 36" wide **48** 48" wide **60** 60" wide
72 72" wide **96** 96" wide

Step 3. Paint Color Code

STANDARD

AS Argent Silver **GL** Grey Light Smooth
AW Arctic White **GT** Grey Light Texture
BK Black **NW** Neutral White
BT Black Texture **ST** Sand Texture

Product Number	Description	Width		Depth		Weight	
		in.	[mm]	in.	[mm]	lb.	[kg]
ESPTG36W	Positionable, 18" travel range, glides	30	762	32 ⅛	816	75	34.0
ESPTG48W	Positionable, 18" travel range, glides	42	1067	32 ⅛	816	77	34.9
ESPTG60W	Positionable, 18" travel range, glides	54	1372	32 ⅛	816	82	37.2
ESPTG72W	Positionable, 18" travel range, glides	66	1676	32 ⅛	816	85	38.6
ESPTG96W	Positionable, 18" travel range, glides	90	2286	32 ⅛	816	92	41.7
ESPTC36W	Positionable, 18" travel range, casters	30	762	34 ⅛	867	118	53.5
ESPTC48W	Positionable, 18" travel range, casters	42	1067	34 ⅛	867	122	55.3
ESPTC60W	Positionable, 18" travel range, casters	54	1372	34 ⅛	867	126	57.2
ESPTC72W	Positionable, 18" travel range, casters	66	1676	34 ⅛	867	129	58.5
ESPTC96W	Positionable, 18" travel range, casters	90	2286	34 ⅛	867	136	61.7

Rev 11/23/26

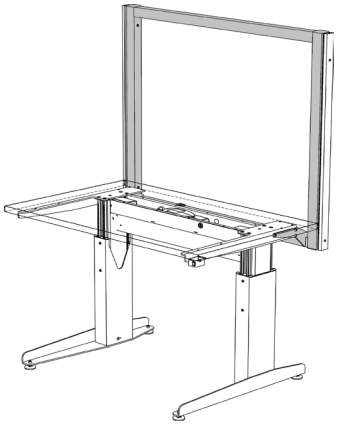

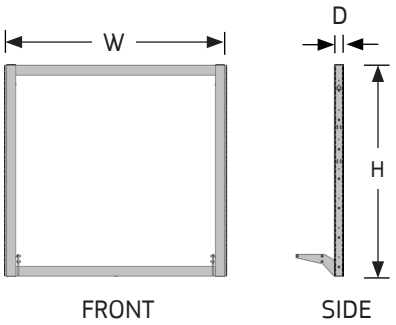

ERGOSTAT RISER FRAME

- Open style frame provides upright support for hanging components.
- Frame bolts to ErgoStat Base, adjusting in height with the base.
- Frame permits vertical adjustment of components in 1" increments and provides one attachment point for ESD grounding hardware per unit.
- Equipped with attachment points for Riser Spines; 36" wide Riser Frame excluded.
- Frame features ¼"-20 threaded inserts for vertical inside mounting of Cable Ducts Frame Mount, Cable Ring Ducts and Plug Strips. Riser Frames accommodate a 36" component per side.
- Load capacity 250 lbs.

NOTES

» Riser Spines sold separately; see page 3.7.
» Riser Frames extend 38½" above surfaces.
» End Covers finish exposed hardware. Sold separately; see page 3.7.
» Do not hang components from the unsupported side of a frame or panel.

How to Specify

Step 1. Product Number

RF43

Step 2. Width

36	36" wide	**48**	48" wide	**60**	60" wide
72	72" wide	**96**	96" wide		

Step 3. Paint Color Code

STANDARD

AS	Argent Silver	**GL**	Grey Light Smooth
AW	Arctic White	**GT**	Grey Light Texture
BK	Black	**NW**	Neutral White
BT	Black Texture	**ST**	Sand Texture

Product Number	Description	Height		Width		Depth		Weight	
		in.	[mm]	in.	[mm]	in.	[mm]	lb.	[kg]
RF4336	Riser frame	43	1092	36	914	2	51	41	18.6
RF4348	Riser frame	43	1092	48	1219	2	51	50	22.7
RF4360	Riser frame	43	1092	60	1524	2	51	59	26.8
RF4372	Riser frame	43	1092	72	1829	2	51	68	30.8
RF4396	Riser frame	43	1092	96	2438	2	51	86	39.0

Rev 04/01/19

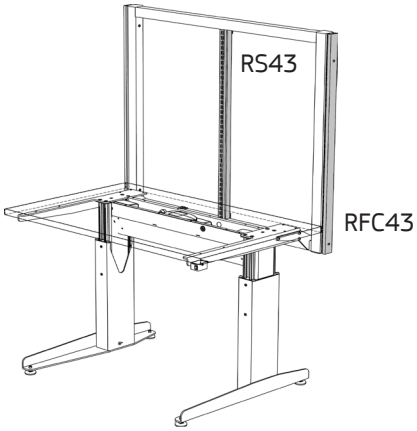

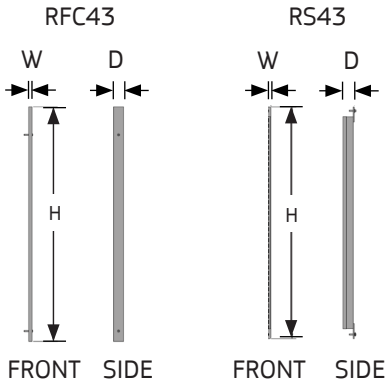

ERGOSTAT RISER SPINE + END COVER

Riser Spines

- Riser Spines divide ErgoStat Riser Frames into smaller sections and provide upright support for hanging components.
- Spines permit vertical adjustment of components in 1" increments and bolt to attachment points on Riser Frames.
- Riser Spines provide hanger frames on the front only; spines cannot be used for mounting Center Shelves or saddle-mounted arms.
- Finish is Black.

Riser Frame End Covers

- Metal covers finish exposed hardware on the ends of Riser Frames.
- Sold individually.
- Finish must be specified.

NOTES

» Riser Frame sold separately; see page 3.6.
» Riser Spines allowed:

48" - 1
60" - 1 (30-30 or 24-36 split)
72" - up to 2
96" - up to 3

How to Specify

Step 1. Product Number

RFC43 End Cover
RS43 Spine

Step 2. Paint Color Code (End Cover only)

STANDARD

AS Argent Silver
AW Arctic White
BK Black
BT Black Texture
GL Grey Light Smooth
GT Grey Light Texture
NW Neutral White
ST Sand Texture

Step 3. Paint Color Code (Riser Spine only)

BK Black

Product Number	Description	Height		Width		Depth		Weight	
		in.	[mm]	in.	[mm]	in.	[mm]	lb.	[kg]
RS43BK	Riser frame spine	43	1092	1 ¼	32	2	51	5	2.3
RFC43	Riser frame end cover	43	1092	½	13	2	51	1	0.5

Rev 04/01/19

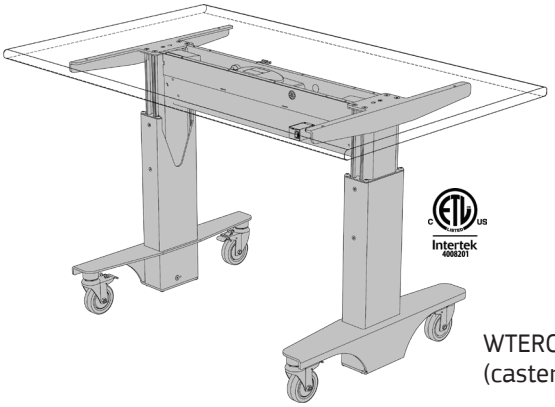

WTERC
(casters)

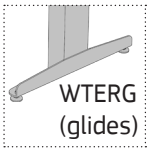

WTERG
(glides)

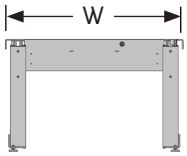

FRONT

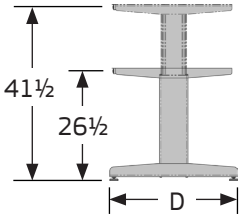

SIDE

WORKTABLE BASE, ELECTRIC, 15" TRAVEL RANGE

- Use exclusively with Work Surfaces to construct two-sided height adjustable tables.
- 48" wide bases accommodate 48", 60" and 72" wide tops.
- 72" wide bases accommodate 72" and 96" wide tops.
- The electrically driven self-guided aluminum assemblies have a 15" travel range from 26½" to 41½" to the underside of the surfaces, rising at ¼" per second.
- Bases require 120 Volt, 60 Hz. power. A hand control switch and a 9½' power cord are supplied. Amp draw: 4 Amps.
- Available with leveling glides or 4" polypropylene casters with totalock brakes (simultaneously locks the swivel and wheel).
- Gross dynamic load capacity 1,200 lbs. evenly distributed.
- Shipped fully assembled. Hand control switch is field installed to surfaces.
- ETL recognized; conforms to UL Std. 962 and certified to CSA Std. C22.2 No. 68.

NOTES

» Work Surfaces sold separately; see Section 4.
» Optional Lower Shelf sold separately; see page 3.21.
» Travel range is measured from floor to bottom of surface.
» International electrical configuration available; consult factory.
» Hand control switch (Symbiote standard "J") is field installed. Optional styles available; see page 3.27.

How to Specify

Step 1. Product Number

WTERG Glide Base, 15" Travel Range
WTERC Caster Base, 15" Travel Range

Step 2. Depth

30 30" deep **36** 36" deep

Step 3. Width

48 48" wide **72** 72" wide

Step 4. Paint Color Code

STANDARD

AS Argent Silver
AW Arctic White
BK Black
BT Black Texture
GL Grey Light Smooth
GT Grey Light Texture
NW Neutral White
ST Sand Texture

Product Number	Description	Width		Depth		Weight	
		in.	[mm]	in.	[mm]	lb.	[kg]
WTERG3048J	Electric, 15" travel range, glides	42	1067	30	762	106	48.1
WTERG3072J	Electric, 15" travel range, glides	66	1676	30	762	113	51.3
WTERC3048J	Electric, 15" travel range, casters	42	1067	30	762	119	54.0
WTERC3072J	Electric, 15" travel range, casters	66	1676	30	762	126	57.2
WTERG3648J	Electric, 15" travel range, glides	42	1067	30	762	114	51.7
WTERG3672J	Electric, 15" travel range, glides	66	1676	30	762	121	54.9
WTERC3648J	Electric, 15" travel range, casters	42	1067	30	762	127	57.6
WTERC3672J	Electric, 15" travel range, casters	66	1676	30	762	134	60.8

Rev 11/23/26

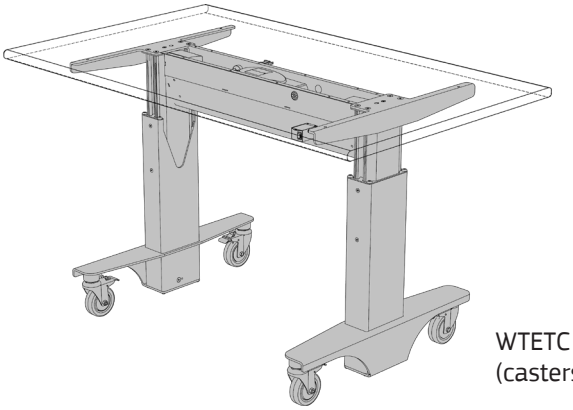

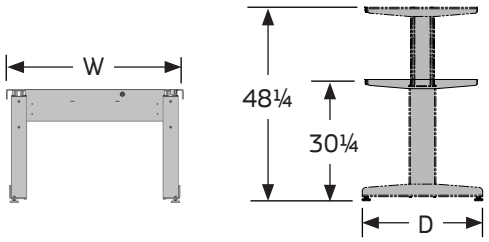

WORKTABLE BASE, ELECTRIC, 18" TRAVEL RANGE

- Use exclusively with Work Surfaces to construct two-sided height adjustable tables.
- 48" wide bases accommodate 48", 60" and 72" wide tops.
- 72" wide bases accommodate 72" and 96" wide tops.
- The electrically driven self-guided aluminum assemblies have a 18" travel range from 30¼" to 48¼" to the underside of the surfaces, rising at ¼" per second.
- Bases require 120 Volt, 60 Hz. power. A hand control switch and a 9½' power cord are supplied. Amp draw: 4 Amps.
- Available with leveling glides or 4" polypropylene casters with totalock brakes (simultaneously locks the swivel and wheel).
- Gross dynamic load capacity 1,200 lbs. evenly distributed.
- Shipped fully assembled. Hand control switch is field installed to surfaces.
- Uses ETL recognized components.

NOTES

» Work Surfaces sold separately; see Section 4.
» Optional Lower Shelf sold separately; see page 3.21.
» Travel range is measured from floor to bottom of surface.
» International electrical configuration available; consult factory.
» Hand control switch (Symbiote standard "J") is field installed. Optional styles available; see page 3.27.

How to Specify

Step 1. Product Number

WTETG Glide Base, 18" Travel Range
WTETC Caster Base, 18" Travel Range

Step 2. Depth

30 30" deep **36** 36" deep

Step 3. Width

48 48" wide **72** 72" wide

Step 4. Paint Color Code

STANDARD

AS Argent Silver
AW Arctic White
BK Black
BT Black Texture
GL Grey Light Smooth
GT Grey Light Texture
NW Neutral White
ST Sand Texture

Product Number	Description	Width		Depth		Weight	
		in.	[mm]	in.	[mm]	lb.	[kg]
WTETG3048J	Electric, 18" travel range, glides	42	1067	30	762	113	51.3
WTETG3072J	Electric, 18" travel range, glides	66	1676	30	762	120	54.4
WTETC3048J	Electric, 18" travel range, casters	42	1067	30	762	126	57.2
WTETC3072J	Electric, 18" travel range, casters	66	1676	30	762	133	60.3
WTETG3648J	Electric, 18" travel range, glides	42	1067	36	914	121	54.9
WTETG3672J	Electric, 18" travel range, glides	66	1676	36	914	128	58.1
WTETC3648J	Electric, 18" travel range, casters	42	1067	36	914	134	60.8
WTETC3672J	Electric, 18" travel range, casters	66	1676	36	914	141	64.0

Rev 11/23/26

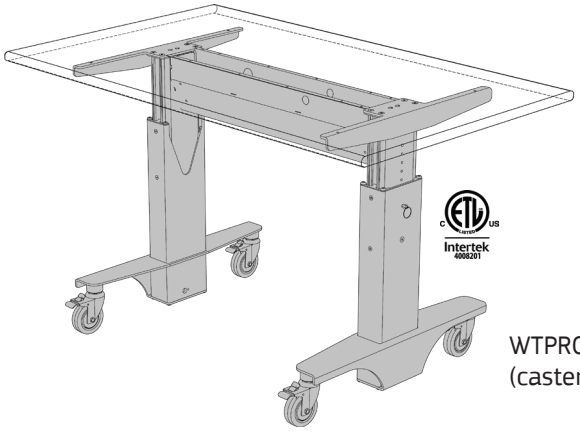

WTPRC
(casters)

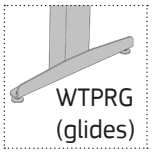

WTPRG
(glides)

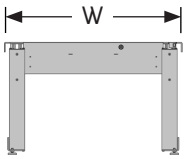

FRONT

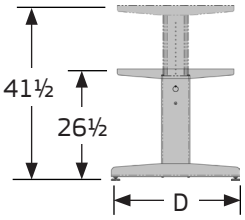

SIDE

WORKTABLE BASE, POSITIONABLE, 15" TRAVEL RANGE

- Use exclusively with Work Surfaces to construct two-sided height adjustable tables.
- 48" wide bases accommodate 48", 60" and 72" wide tops.
- 72" wide bases accommodate 72" and 96" wide tops.
- The self-guided aluminum assemblies have a 15" travel range from 26½" to 41½" to the underside of the surface. Bases adjust in 1" increments with threaded fasteners.
- Available with leveling glides or 4" polypropylene casters with totalock brakes (simultaneously locks the swivel and wheel).
- Load capacity 1,200 lbs. evenly distributed.
- Shipped fully assembled.
- ETL recognized; conforms to UL Std. 962 and certified to CSA Std. C22.2 No. 68.

NOTES

» Work Surfaces sold separately; see Section 4.
» Optional Lower Shelf sold separately; see page 3.21.
» Travel range is measured from floor to bottom of surface.

How to Specify

Step 1. Product Number

WTPRG Glide Base, 15" Travel Range
WTPRC Caster Base, 15" Travel Range

Step 2. Depth

30 30" deep **36** 36" deep

Step 3. Width

48 48" wide **72** 72" wide

Step 4. Paint Color Code

STANDARD

AS Argent Silver
AW Arctic White
BK Black
BT Black Texture
GL Grey Light Smooth
GT Grey Light Texture
NW Neutral White
ST Sand Texture

Product Number	Description	Width		Depth		Weight	
		in.	[mm]	in.	[mm]	lb.	[kg]
WTPRG3048W	Positionable, 15" travel range, glides	42	1067	30	762	98	44.5
WTPRG3072W	Positionable, 15" travel range, glides	66	1676	30	762	126	57.2
WTPRC3048W	Positionable, 15" travel range, casters	42	1067	30	762	103	46.7
WTPRC3072W	Positionable, 15" travel range, casters	66	1676	30	762	111	50.3
WTPRG3648W	Positionable, 15" travel range, glides	42	1067	36	914	106	48.1
WTPRG3672W	Positionable, 15" travel range, glides	66	1676	36	914	134	60.8
WTPRC3648W	Positionable, 15" travel range, casters	42	1067	36	914	111	50.3
WTPRC3672W	Positionable, 15" travel range, casters	66	1676	36	914	119	54.0

Rev 11/23/26

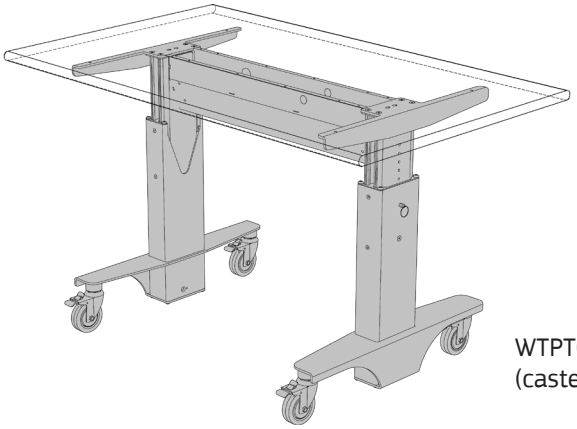

WTPTC
(casters)



WTPTG
(glides)

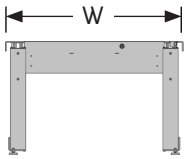

FRONT

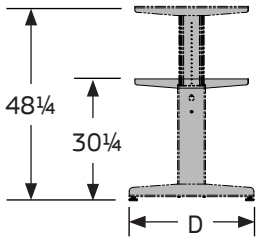

SIDE

WORKTABLE BASE, POSITIONABLE, 18" TRAVEL RANGE

- Use exclusively with Work Surfaces to construct two-sided height adjustable tables.
- 48" wide bases accommodate 48", 60" and 72" wide tops.
- 72" wide bases accommodate 72" and 96" wide tops.
- The self-guided aluminum assemblies have a 18" travel range from 30¼" to 48¼" to the underside of the surface. Bases adjust in 1" increments with threaded fasteners.
- Available with leveling glides or 4" polypropylene casters with totalock brakes (simultaneously locks the swivel and wheel).
- Load capacity 1,200 lbs. evenly distributed.
- Shipped fully assembled.

NOTES

» Work Surfaces sold separately; see Section 4.
» Optional Lower Shelf sold separately; see page 3.21.
» Travel range is measured from floor to bottom of surface.

How to Specify

Step 1. Product Number

WTPTG Glide Base, 18" Travel Range
WTPTC Caster Base, 18" Travel Range

Step 2. Depth

30 30" deep **36** 36" deep

Step 3. Width

48 48" wide **72** 72" wide

Step 4. Paint Color Code

STANDARD

AS Argent Silver
AW Arctic White
BK Black
BT Black Texture
GL Grey Light Smooth
GT Grey Light Texture
NW Neutral White
ST Sand Texture

Product Number	Description	Width		Depth		Weight	
		in.	[mm]	in.	[mm]	lb.	[kg]
WTPTG3048W	Positionable, 18" travel range, glides	42	1067	30	762	103	46.7
WTPTG3072W	Positionable, 18" travel range, glides	66	1676	30	762	105	47.6
WTPTC3048W	Positionable, 18" travel range, casters	42	1067	30	762	110	49.9
WTPTC3072W	Positionable, 18" travel range, casters	66	1676	30	762	118	53.5
WTPTG3648W	Positionable, 18" travel range, glides	42	1067	36	914	109	49.4
WTPTG3672W	Positionable, 18" travel range, glides	66	1676	36	914	113	51.3
WTPTC3648W	Positionable, 18" travel range, casters	42	1067	36	914	118	53.5
WTPTC3672W	Positionable, 18" travel range, casters	66	1676	36	914	126	57.2

Rev 11/23/26

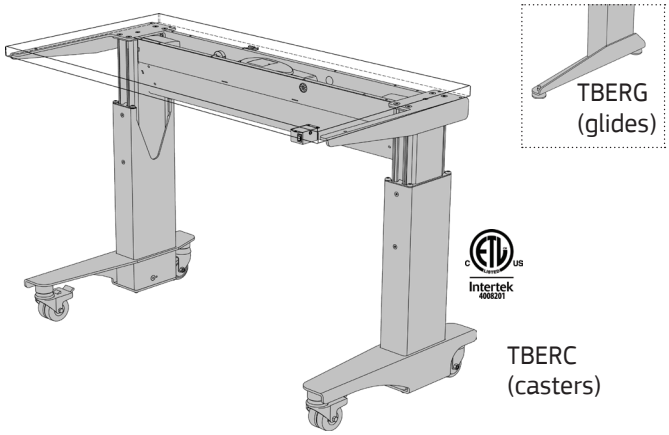

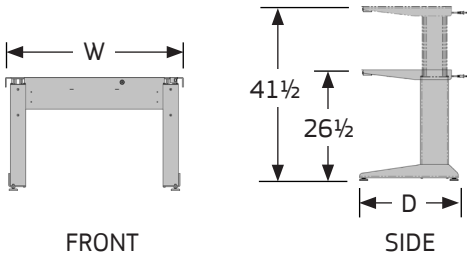

TABLE BASE, ELECTRIC, 15" TRAVEL RANGE

- Use with 24" and 30" deep Ultra Surfaces to construct a height adjustable bench.
- The electrically driven self-guided aluminum assemblies have a 15" travel range from 26½" to 41½" to the underside of the surfaces, rising at ¼" per second.
- Bases require 120 Volt, 60 Hz. power. A hand control switch and a 9½' power cord are supplied. Amp Draw: 4 Amps.
- Available with leveling glides or 3" polypropylene locking casters.
- Gross dynamic load capacity 1,200 lbs. evenly distributed.
- Shipped fully assembled. Hand control switch is field installed to surfaces.
- ETL recognized; conforms to UL Std. 962 and certified to CSA Std. C22.2 No. 68.

NOTES

» Surfaces sold separately; see Section 4. The 30" and 36" deep surfaces are limited to 18" and 24" deep accessories respectively. Accessories greater than 12" deep cannot be mounted to 24" deep surfaces.
» Optional Lower Shelf sold separately; see page 3.21.
» Travel range is measured from floor to bottom of surface.
» International electrical configuration available; consult factory.
» Hand control switch (Symbiote standard "J") is field installed. Optional styles available; see page 3.27.

How to Specify

Step 1. Product Number

TBERG Glide Base, 15" Travel Range
TBERC Caster Base, 15" Travel Range

Step 2. Width

36 36" wide **48** 48" wide **60** 60" wide
72 72" wide **96** 96" wide

Step 3. Paint Color Code

STANDARD

AS Argent Silver **GL** Grey Light Smooth
AW Arctic White **GT** Grey Light Texture
BK Black **NW** Neutral White
BT Black Texture **ST** Sand Texture

Product Number	Description	Width		Depth		Weight	
		in.	[mm]	in.	[mm]	lb.	[kg]
TBERG36J	Electric, 15" travel, glides, 24" and 30" surfaces	35 ½	902	23 ½	597	83	37.6
TBERG48J	Electric, 15" travel, glides, 24" and 30" surfaces	47 ½	1207	23 ½	597	86	39.0
TBERG60J	Electric, 15" travel, glides, 24" and 30" surfaces	59 ½	1511	23 ½	597	91	41.3
TBERG72J	Electric, 15" travel, glides, 24" and 30" surfaces	71 ½	1816	23 ½	597	94	42.6
TBERG96J	Electric, 15" travel, glides, 24" and 30" surfaces	95 ½	2426	32 ⅛	816	101	45.8
TBERC36J	Electric, 15" travel, casters, 24" and 30" surfaces	35 ½	902	23 ½	597	126	57.2
TBERC48J	Electric, 15" travel, casters, 24" and 30" surfaces	47 ½	1207	23 ½	597	130	59.0
TBERC60J	Electric, 15" travel, casters, 24" and 30" surfaces	59 ½	1511	23 ½	597	134	60.8
TBERC72J	Electric, 15" travel, casters, 24" and 30" surfaces	71 ½	1816	23 ½	597	137	62.1
TBERC96J	Electric, 15" travel, casters, 24" and 30" surfaces	95 ½	2426	23 ½	597	145	65.8

Rev 11/23/26

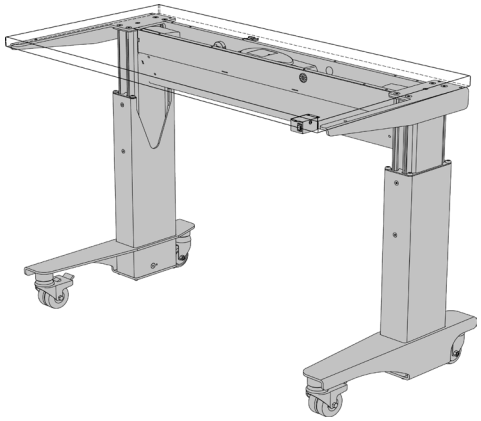

TBETC
(casters)

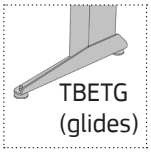

TBETG
(glides)

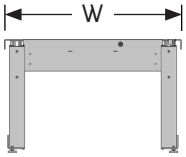

FRONT

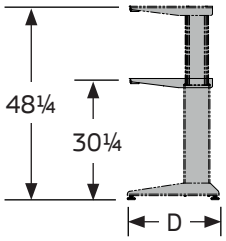

SIDE

TABLE BASE, ELECTRIC, 18" TRAVEL RANGE

- Use with 24" and 30" deep surfaces to construct a height adjustable bench.
- The electrically driven self-guided aluminum assemblies have a 18" travel range from 30¼" to 48¼" to the underside of the surface, rising at ¼" per second.
- Bases require 120 Volt, 60 Hz. power. A hand control switch and a 9½' power cord are supplied. Amp Draw: 4 Amps.
- Available with leveling glides or 3" polypropylene locking casters.
- Gross dynamic load capacity 1,200 lbs. evenly distributed.
- Shipped fully assembled. Hand control switch is field installed to surfaces.
- Uses ETL recognized components.

NOTES

» Surfaces sold separately; see Section 4. The 30" and 36" deep surfaces are limited to 18" and 24" deep accessories respectively. Accessories greater than 12" deep cannot be mounted to 24" deep surfaces.
» Optional Lower Shelf sold separately; see page 3.21.
» Travel range is measured from floor to bottom of surface.
» International electrical configuration available; consult factory.
» Hand control switch (Symbiote standard "J") is field installed. Optional styles available; see page 3.27.

How to Specify

Step 1. Product Number

TBETG Glide Base, 18" Travel Range
TBETC Caster Base, 18" Travel Range

Step 2. Width

36 36" wide **48** 48" wide **60** 60" wide
72 72" wide **96** 96" wide

Step 3. Paint Color Code

STANDARD

AS Argent Silver **GL** Grey Light Smooth
AW Arctic White **GT** Grey Light Texture
BK Black **NW** Neutral White
BT Black Texture **ST** Sand Texture

Product Number	Description	Width		Depth		Weight	
		in.	[mm]	in.	[mm]	lb.	[kg]
TBETG36J	Electric, 18" travel, glides, 24" and 30" surfaces	35 ½	902	23 ½	597	90	40.8
TBETG48J	Electric, 18" travel, glides, 24" and 30" surfaces	47 ½	1207	23 ½	597	93	42.2
TBETG60J	Electric, 18" travel, glides, 24" and 30" surfaces	59 ½	1511	23 ½	597	98	44.5
TBETG72J	Electric, 18" travel, glides, 24" and 30" surfaces	71 ½	1816	23 ½	597	101	45.8
TBETG96J	Electric, 18" travel, glides, 24" and 30" surfaces	95 ½	2426	32 ⅛	816	108	49.0
TBETC36J	Electric, 18" travel, casters, 24" and 30" surfaces	35 ½	902	23 ½	597	133	60.3
TBETC48J	Electric, 18" travel, casters, 24" and 30" surfaces	47 ½	1207	23 ½	597	137	62.1
TBETC60J	Electric, 18" travel, casters, 24" and 30" surfaces	59 ½	1511	23 ½	597	141	64.0
TBETC72J	Electric, 18" travel, casters, 24" and 30" surfaces	71 ½	1816	23 ½	597	144	65.3
TBETC96J	Electric, 18" travel, casters, 24" and 30" surfaces	95 ½	2426	32 ⅛	816	152	68.9

Rev 11/23/26

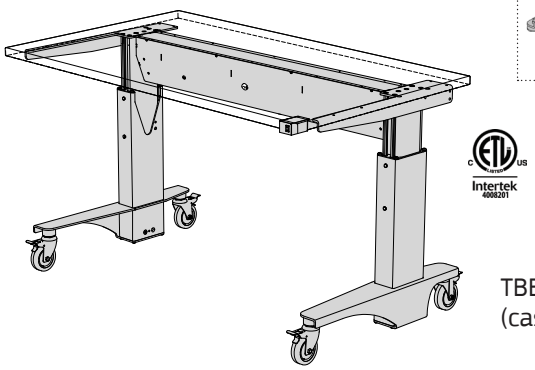

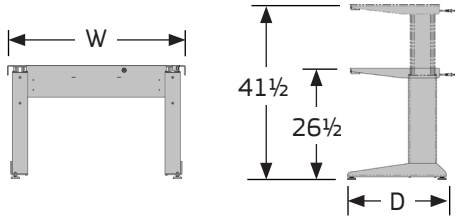

TABLE BASE, ELECTRIC, 15" TRAVEL RANGE, 36" D. SURFACE

- Use with 36" deep surfaces only to construct a height adjustable bench.
- The electrically driven self-guided aluminum assemblies have a 15" travel range from 26½" to 41½" to the underside of the surface, rising at ¼" per second.
- Bases require 120 Volt, 60 Hz. power. A hand control switch and a 9½' power cord are supplied. Amp Draw: 4 Amps.
- Available with leveling glides or 3" polypropylene locking casters.
- Gross dynamic load capacity 1,200 lbs. evenly distributed.
- Shipped fully assembled. Hand control switch is field installed to surfaces.
- ETL recognized; conforms to UL Std. 962 and certified to CSA Std. C22.2 No. 68.

NOTES

» Surfaces sold separately; see Section 4. The 36" deep surfaces are limited to 24" deep accessories.
» Optional Lower Shelf sold separately; see page 3.21.
» Travel range is measured from floor to bottom of surface.
» International electrical configuration available; consult factory.
» Hand control switch (Symbiote standard "J") is field installed. Optional styles available; see page 3.27.

How to Specify

Step 1. Product Number

TBERG Glide Base, 15" Travel Range
TBERC Caster Base, 15" Travel Range

Step 2. Depth

36 36" deep

Step 3. Width

36 36" wide **48** 48" wide **60** 60" wide
72 72" wide **96** 96" wide

Step 4. Paint Color Code

STANDARD

AS Argent Silver **GL** Grey Light Smooth
AW Arctic White **GT** Grey Light Texture
BK Black **NW** Neutral White
BT Black Texture **ST** Sand Texture

Product Number	Description	Width		Depth		Weight	
		in.	[mm]	in.	[mm]	lb.	[kg]
TBERG3636J	Electric, 15" travel, glides, 36" D surface	35 ½	902	32 ⅛	816	83	37.6
TBERG3648J	Electric, 15" travel, glides, 36" D surface	47 ½	1207	32 ⅛	816	86	39.0
TBERG3660J	Electric, 15" travel, glides, 36" D surface	59 ½	1511	32 ⅛	816	91	41.3
TBERG3672J	Electric, 15" travel, glides, 36" D surface	71 ½	1816	32 ⅛	816	94	42.6
TBERG3696J	Electric, 15" travel, glides, 36" D surface	95 ½	2426	32 ⅛	816	101	45.8
TBERC3636J	Electric, 15" travel, casters, 36" D surface	35 ½	902	34 ⅛	867	126	57.2
TBERC3648J	Electric, 15" travel, casters, 36" D surface	47 ½	1207	34 ⅛	867	130	59.0
TBERC3660J	Electric, 15" travel, casters, 36" D surface	59 ½	1511	34 ⅛	867	134	60.8
TBERC3672J	Electric, 15" travel, casters, 36" D surface	71 ½	1816	34 ⅛	867	137	62.1
TBERC3696J	Electric, 15" travel, casters, 36" D surface	95 ½	2426	34 ⅛	867	145	65.8

Rev 11/23/26

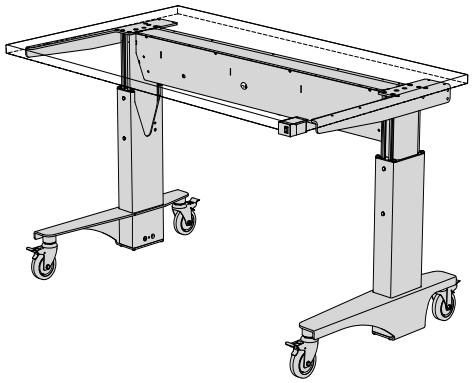

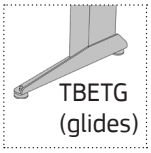

TBETC
(casters)

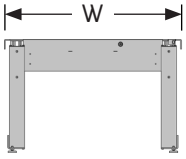

FRONT

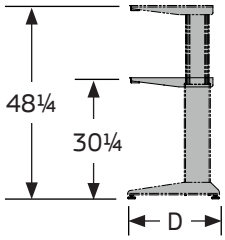

SIDE

TABLE BASE, ELECTRIC, 18" TRAVEL RANGE, 36" D. SURFACE

- Use with 36" deep surfaces only to construct a height adjustable bench.
- The electrically driven self-guided aluminum assemblies have a 18" travel range from 30¼" to 48¼" to the underside of the surface, rising at ¼" per second.
- Bases require 120 Volt, 60 Hz. power. A hand control switch and a 9½' power cord are supplied. Amp Draw: 4 Amps.
- Available with leveling glides or 3" polypropylene locking casters.
- Gross dynamic load capacity 1,200 lbs. evenly distributed.
- Shipped fully assembled. Hand control switch is field installed to surfaces.
- Uses ETL recognized components.

NOTES

» Surfaces sold separately; see Section 4. The 36" deep surfaces are limited to 24" deep accessories.
» Optional Lower Shelf sold separately; see page 3.21.
» Travel range is measured from floor to bottom of surface.
» International electrical configuration available; consult factory.
» Hand control switch (Symbiote standard "J") is field installed. Optional styles available; see page 3.27.

How to Specify

Step 1. Product Number

TBETG Glide Base, 18" Travel Range
TBETC Caster Base, 18" Travel Range

Step 2. Depth

36 36" deep

Step 3. Width

36 36" wide **48** 48" wide **60** 60" wide
72 72" wide **96** 96" wide

Step 4. Paint Color Code

STANDARD

AS Argent Silver **GL** Grey Light Smooth
AW Arctic White **GT** Grey Light Texture
BK Black **NW** Neutral White
BT Black Texture **ST** Sand Texture

Product Number	Description	Width		Depth		Weight	
		in.	[mm]	in.	[mm]	lb.	[kg]
TBETG3636J	Electric, 18" travel, glides, 36" D surface	35 ½	902	32 ⅛	816	90	40.8
TBETG3648J	Electric, 18" travel, glides, 36" D surface	47 ½	1207	32 ⅛	816	86	39.0
TBETG3660J	Electric, 18" travel, glides, 36" D surface	59 ½	1511	32 ⅛	816	98	44.5
TBETG3672J	Electric, 18" travel, glides, 36" D surface	71 ½	1816	32 ⅛	816	101	45.8
TBETG3696J	Electric, 18" travel, glides, 36" D surface	95 ½	2426	32 ⅛	816	108	49.0
TBETC3636J	Electric, 18" travel, casters, 36" D surface	35 ½	902	34 ⅛	867	133	60.3
TBETC3648J	Electric, 18" travel, casters, 36" D surface	47 ½	1207	34 ⅛	867	137	62.1
TBETC3660J	Electric, 18" travel, casters, 36" D surface	59 ½	1511	34 ⅛	867	141	64.0
TBETC3672J	Electric, 18" travel, casters, 36" D surface	71 ½	1816	34 ⅛	867	144	65.3
TBETC3696J	Electric, 18" travel, casters, 36" D surface	95 ½	2426	34 ⅛	867	152	68.9

Rev 11/23/26

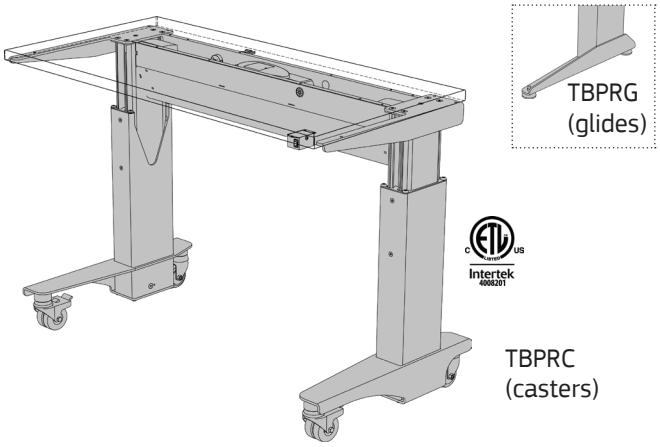

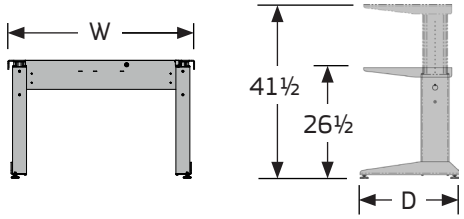

TABLE BASE, POSITIONABLE, 15" TRAVEL RANGE

- Use with 24" and 30" deep surfaces to construct a height adjustable bench.
- The self-guided aluminum assemblies have a 15" travel range from 26½" to 41½" to the underside of the surfaces. Bases adjust in 1" increments with threaded fasteners.
- Available with leveling glides or 3" polypropylene locking casters.
- Load capacity 1,200 lbs. evenly distributed.
- Shipped fully assembled.
- ETL recognized; conforms to UL Std. 962 and certified to CSA Std. C22.2 No. 68.

NOTES

» Surfaces sold separately; see Section 4.
» Optional Lower Shelf sold separately; see page 3.21.
» Travel range is measured from floor to bottom of surface.

How to Specify

Step 1. Product Number

TBPRG Glide Base, 15" Travel Range
TBPRC Caster Base, 15" Travel Range

Step 2. Width

36 36" wide **48** 48" wide **60** 60" wide
72 72" wide **96** 96" wide

Step 3. Paint Color Code

STANDARD

AS Argent Silver **GL** Grey Light Smooth
AW Arctic White **GT** Grey Light Texture
BK Black **NW** Neutral White
BT Black Texture **ST** Sand Texture

Product Number	Description	Width		Depth		Weight	
		in.	[mm]	in.	[mm]	lb.	[kg]
TBPRG36W	Positionable, 15" travel, 24" and 30" D. surfaces, glides	35 ½	902	23 ½	597	68	30.8
TBPRG48W	Positionable, 15" travel, 24" and 30" D. surfaces, glides	47 ½	1207	23 ½	597	72	32.7
TBPRG60W	Positionable, 15" travel, 24" and 30" D. surfaces, glides	59 ½	1511	23 ½	597	75	34.0
TBPRG72W	Positionable, 15" travel, 24" and 30" D. surfaces, glides	71 ½	1816	23 ½	597	78	35.4
TBPRG96W	Positionable, 15" travel, 24" and 30" D. surfaces, glides	95 ½	2426	23 ½	597	85	38.6
TBPRC36W	Positionable, 15" travel, 24" and 30" D. surfaces, casters	35 ½	902	23 ½	597	111	50.3
TBPRC48W	Positionable, 15" travel, 24" and 30" D. surfaces, casters	47 ½	1207	23 ½	597	115	52.2
TBPRC60W	Positionable, 15" travel, 24" and 30" D. surfaces, casters	59 ½	1511	23 ½	597	119	54.0
TBPRC72W	Positionable, 15" travel, 24" and 30" D. surfaces, casters	71 ½	1816	23 ½	597	122	55.3
TBPRC96W	Positionable, 15" travel, 24" and 30" D. surfaces, casters	95 ½	2426	23 ½	597	129	58.5

Rev 11/23/26

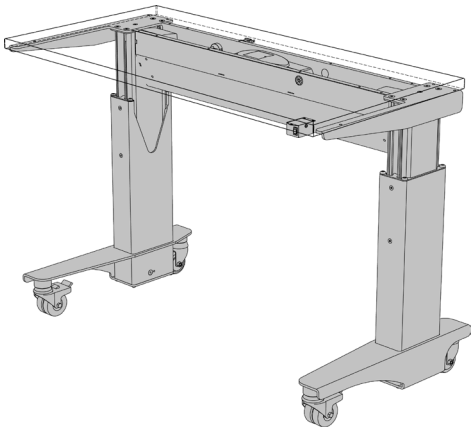

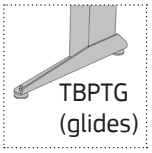

TBPTC
(casters)

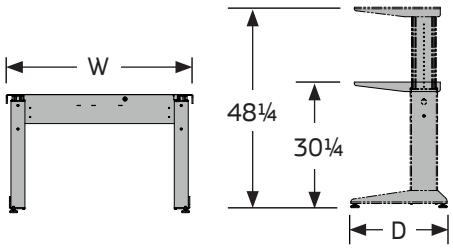

TABLE BASE, POSITIONABLE, 18" TRAVEL RANGE

- Use with 24" and 30" deep surfaces to construct a height adjustable bench.
- The self-guided aluminum assemblies have a 18" travel range from 30¼" to 48¼" to the underside of the surface. Bases adjust in 1" increments with threaded fasteners.
- Available with leveling glides or 3" polypropylene locking casters.
- Load capacity 1,200 lbs. evenly distributed.
- Shipped fully assembled.

NOTES

» Surfaces sold separately; see Section 4.
» Optional Lower Shelf sold separately; see page 3.21.
» Travel range is measured from floor to bottom of surface.

How to Specify

Step 1. Product Number

TBPTG Glide Base, 18" Travel Range
TBPTC Caster Base, 18" Travel Range

Step 2. Width

36 36" wide **48** 48" wide **60** 60" wide
72 72" wide **96** 96" wide

Step 3. Paint Color Code

STANDARD

AS Argent Silver **GL** Grey Light Smooth
AW Arctic White **GT** Grey Light Texture
BK Black **NW** Neutral White
BT Black Texture **ST** Sand Texture

Product Number	Description	Width		Depth		Weight	
		in.	[mm]	in.	[mm]	lb.	[kg]
TBPTG36W	Positionable, 18" travel, 24" and 30" D. surfaces, glides	35 ½	902	23 ½	597	75	34.0
TBPTG48W	Positionable, 18" travel, 24" and 30" D. surfaces, glides	47 ½	1207	23 ½	597	79	35.8
TBPTG60W	Positionable, 18" travel, 24" and 30" D. surfaces, glides	59 ½	1511	23 ½	597	82	37.2
TBPTG72W	Positionable, 18" travel, 24" and 30" D. surfaces, glides	71 ½	1816	23 ½	597	85	38.6
TBPTG96W	Positionable, 18" travel, 24" and 30" D. surfaces, glides	95 ½	2426	23 ½	597	92	41.7
TBPTC36W	Positionable, 18" travel, 24" and 30" D. surfaces, casters	35 ½	902	23 ½	597	118	53.5
TBPTC48W	Positionable, 18" travel, 24" and 30" D. surfaces, casters	47 ½	1207	23 ½	597	122	55.3
TBPTC60W	Positionable, 18" travel, 24" and 30" D. surfaces, casters	59 ½	1511	23 ½	597	126	57.2
TBPTC72W	Positionable, 18" travel, 24" and 30" D. surfaces, casters	71 ½	1816	23 ½	597	129	58.5
TBPTC96W	Positionable, 18" travel, 24" and 30" D. surfaces, casters	95 ½	2426	23 ½	597	136	61.7

Rev 11/23/26

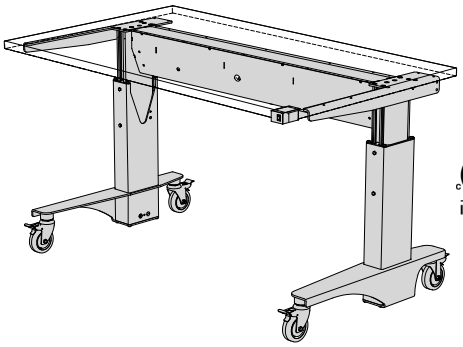

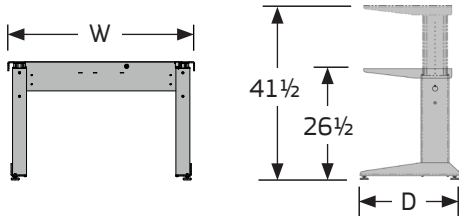

TABLE BASE, POSITIONABLE, 15" TRAVEL RANGE, 36" D. SURFACE

- Use with a 36" deep surface only to construct a height adjustable bench.
- The self-guided aluminum assemblies have a 15" travel range from 26½" to 41½" to the underside of the surface. Bases adjust in 1" increments with threaded fasteners.
- Available with leveling glides or 3" polypropylene locking casters.
- Load capacity 1,200 lbs. evenly distributed.
- Shipped fully assembled.
- ETL recognized; conforms to UL Std. 962 and certified to CSA Std. C22.2 No. 68.

NOTES

» Surfaces sold separately; see Section 4.
» Optional Lower Shelf sold separately; see page 3.21.
» Travel range is measured from floor to bottom of surface.

How to Specify

Step 1. Product Number

TBPRG Glide Base, 15" Travel Range
TBPRC Caster Base, 15" Travel Range

Step 2. Depth

36 36" deep

Step 3. Width

36 36" wide **48** 48" wide **60** 60" wide
72 72" wide **96** 96" wide

Step 4. Paint Color Code

STANDARD

AS Argent Silver **GL** Grey Light Smooth
AW Arctic White **GT** Grey Light Texture
BK Black **NW** Neutral White
BT Black Texture **ST** Sand Texture

Product Number	Description	Width		Depth		Weight	
		in.	[mm]	in.	[mm]	lb.	[kg]
TBPRG3636W	Positionable, 15" travel, 36" D surface, glides	35 ½	902	32 ⅛	816	68	30.8
TBPRG3648W	Positionable, 15" travel, 36" D surface, glides	47 ½	1207	32 ⅛	816	72	32.7
TBPRG3660W	Positionable, 15" travel, 36" D surface, glides	59 ½	1511	32 ⅛	816	75	34.0
TBPRG3672W	Positionable, 15" travel, 36" D surface, glides	71 ½	1816	32 ⅛	816	78	35.4
TBPRG3696W	Positionable, 15" travel, 36" D surface, glides	95 ½	2426	32 ⅛	816	85	38.6
TBPRC3636W	Positionable, 15" travel, 36" D surface, casters	35 ½	902	34 ⅛	867	111	50.3
TBPRC3648W	Positionable, 15" travel, 36" D surface, casters	47 ½	1207	34 ⅛	867	115	52.2
TBPRC3660W	Positionable, 15" travel, 36" D surface, casters	59 ½	1511	34 ⅛	867	119	54.0
TBPRC3672W	Positionable, 15" travel, 36" D surface, casters	71 ½	1816	34 ⅛	867	122	55.3
TBPRC3696W	Positionable, 15" travel, 36" D surface, casters	95 ½	2426	34 ⅛	867	129	58.5

Rev 11/23/26

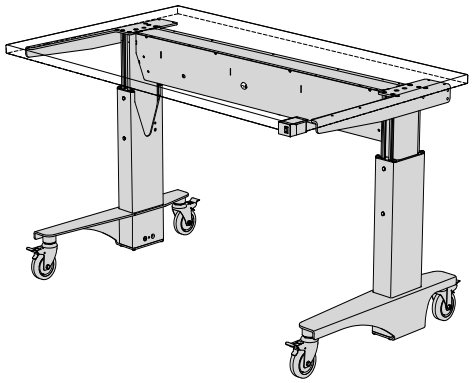

TBPTC
(casters)

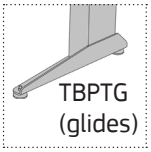

TBPTG
(glides)

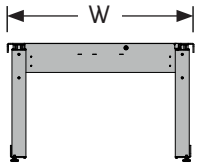

FRONT

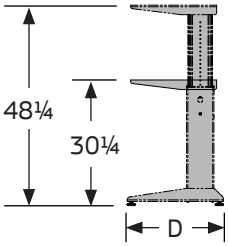

SIDE

TABLE BASE, POSITIONABLE, 18" TRAVEL RANGE, 36" D. SURFACE

- Use with a 36" deep surface only to construct a height adjustable bench.
- The self-guided aluminum assemblies have a 18" travel range from 30¼" to 48¼" to the underside of the surface. Bases adjust in 1" increments with threaded fasteners.
- Available with leveling glides or 3" polypropylene locking casters.
- Load capacity 1,200 lbs. evenly distributed.
- Shipped fully assembled.

NOTES

» Surfaces sold separately; see Section 4.
» Optional Lower Shelf sold separately; see page 3.21.
» Travel range is measured from floor to bottom of surface.

How to Specify

Step 1. Product Number

TBPTG Glide Base, 18" Travel Range
TBPTC Caster Base, 18" Travel Range

Step 2. Depth

36 36" deep

Step 3. Width

36 36" wide **48** 48" wide **60** 60" wide
72 72" wide **96** 96" wide

Step 4. Paint Color Code

STANDARD

AS Argent Silver **GL** Grey Light Smooth
AW Arctic White **GT** Grey Light Texture
BK Black **NW** Neutral White
BT Black Texture **ST** Sand Texture

Product Number	Description	Width		Depth		Weight	
		in.	[mm]	in.	[mm]	lb.	[kg]
TBPTG3636W	Positionable, 18" travel, 36" D surface, glides	35 ½	902	32 ⅛	816	75	34.0
TBPTG3648W	Positionable, 18" travel, 36" D surface, glides	47 ½	1207	32 ⅛	816	79	35.8
TBPTG3660W	Positionable, 18" travel, 36" D surface, glides	59 ½	1511	32 ⅛	816	82	37.2
TBPTG3672W	Positionable, 18" travel, 36" D surface, glides	71 ½	1816	32 ⅛	816	85	38.6
TBPTG3696W	Positionable, 18" travel, 36" D surface, glides	95 ½	2426	32 ⅛	816	92	41.7
TBPTC3636W	Positionable, 18" travel, 36" D surface, casters	35 ½	902	34 ⅛	867	118	53.5
TBPTC3648W	Positionable, 18" travel, 36" D surface, casters	47 ½	1207	34 ⅛	867	122	55.3
TBPTC3660W	Positionable, 18" travel, 36" D surface, casters	59 ½	1511	34 ⅛	867	126	57.2
TBPTC3672W	Positionable, 18" travel, 36" D surface, casters	71 ½	1816	34 ⅛	867	129	58.5
TBPTC3696W	Positionable, 18" travel, 36" D surface, casters	95 ½	2426	34 ⅛	867	136	61.7

Rev 11/23/26

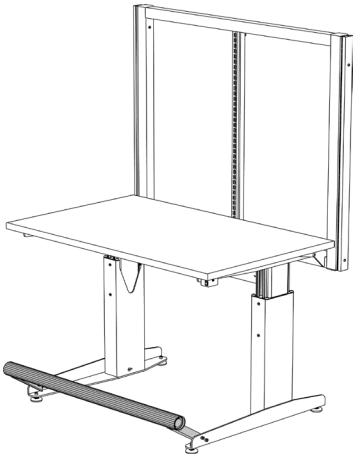

FRE

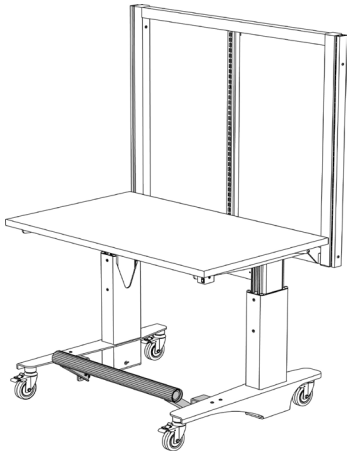

FREC

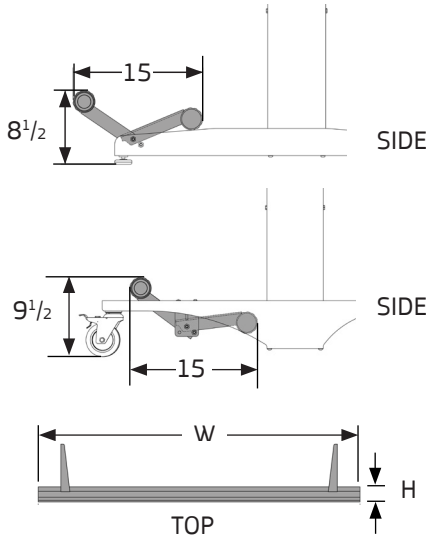

ERGOSTAT FOOTREST

- Footrests support legs and feet when sitting or standing.
- Footrests bolt to ErgoStat and WorkTable Bases with glides or casters.
- Aluminum bars manually adjust forward or back to accommodate sitting or standing and include end caps.
- Finish is Black.

NOTES

» Footrests will not attach to UltraFrames, Table Bases or 4-Legged Tables.
» WorkTable Bases accommodate one ErgoStat Footrest per side.
» Field drilling of holes in feet is required for installation.

How to Specify

Step 1. Product Number

FRE Glide Base
FREC Caster Base

Step 2. Width

36* 36" wide **48** 48" wide **60** 60" wide
72 72" wide **96** 96" wide

Step 3. Paint Color Code

BB Black

Product Number	Description	Width		Height		Weight	
		in.	[mm]	in.	[mm]	lb.	[kg]
FRE36BB	Glide base mount	29 ½	749	2 ½	64	4	1.8
FRE48BB	Glide base mount	41 ½	1054	2 ½	64	5	2.3
FRE60BB	Glide base mount	53 ½	1359	2 ½	64	6	2.7
FRE72BB	Glide base mount	65 ½	1664	2 ½	64	8	3.6
FRE96BB	Glide base mount	89 ½	2273	2 ½	64	11	5.0
FREC36BB	Caster base mount	17 ½	444	2 ½	64	5	2.3
FREC48BB	Caster base mount	29 ½	749	2 ½	64	6	2.7
FREC60BB	Caster base mount	41 ½	1054	2 ½	64	7	3.2
FREC72BB	Caster base mount	53 ½	1359	2 ½	64	9	4.1
FREC96BB	Caster base mount	77 ½	1969	2 ½	64	10	4.5

Rev 11/06/12

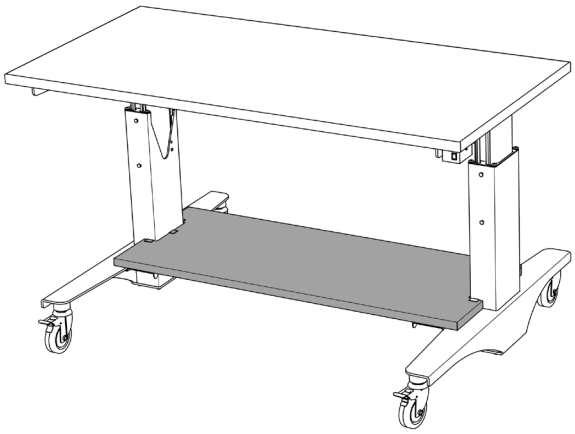

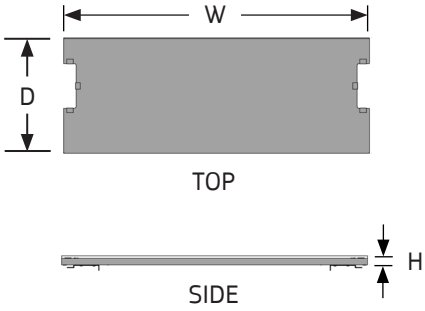

LOWER SHELF

- Lower shelf provides general storage below work surface on Table, WorkTable and ErgoStat bases.
- Mounts on glide or caster bases.
- Works well for storing equipment, reagent supplies or heavy boxes.
- The LES and LTS include two lock-down tabs and a shelf with a ½" raised edge that is positioned in the back.
- The LWS includes four lock-down tabs without a raised edge allowing access from either side.
- No hardware or tools are needed for assembly.
- Load capacity 200 lbs. evenly distributed.

NOTES

» Lower Shelf for 4-Legged Table available; see page 3.28.

How to Specify

Step 1. Product Number

LTS Table Shelf
LES ErgoStat Shelf
LWS WorkTable Shelf

Step 2. Width

48 48" wide **60*** 60" wide **72** 72" wide

**60" width shelf unavailable for WorkTable*

Step 3. Paint Color Code

STANDARD

AS Argent Silver
AW Arctic White
BK Black
BT Black Texture
GL Grey Light Smooth
GT Grey Light Texture
NW Neutral White
ST Sand Texture

Product Number	Description	Height		Width		Depth		Weight	
		in.	[mm]	in.	[mm]	in.	[mm]	lb.	[kg]
LTS48	Lower shelf, Table Base	1 ½	38	42	1067	16	406	22	10.0
LTS60	Lower shelf, Table Base	1 ½	38	54	1372	16	406	27	12.2
LTS72	Lower shelf, Table Base	1 ½	38	66	1676	16	406	32	14.5
LES48	Lower shelf, ErgoStat	1 ½	38	36	914	18	457	19	8.6
LES60	Lower shelf, ErgoStat	1 ½	38	48	1219	18	457	24	10.9
LES72	Lower shelf, ErgoStat	1 ½	38	60	1524	18	457	30	13.6
LWS48	Lower shelf, WorkTable	1	25	36	914	24	610	19	8.6
LWS72	Lower shelf, WorkTable	1	25	60	1524	24	610	32	14.5

Rev 08/15/24

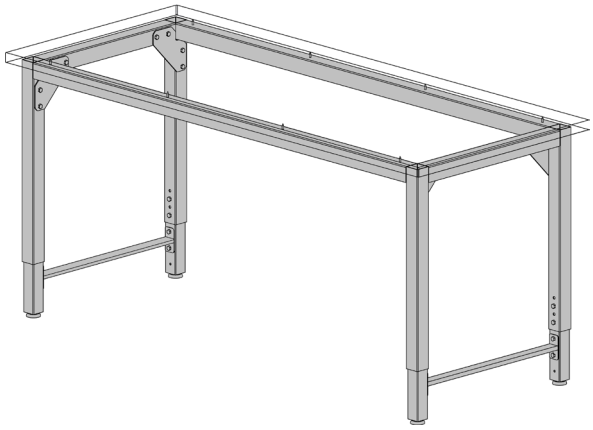

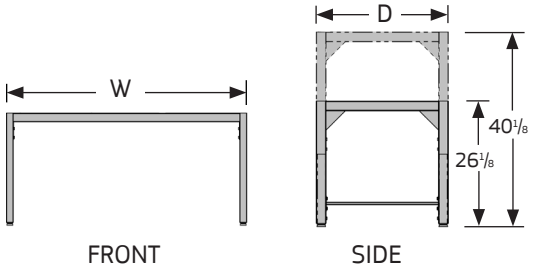

4-LEGGED TABLE, GLIDES

- Table has leveling glides and a 14" travel range measuring 26⅛" to 40⅛" from the floor to the bottom of the work surface. Adjusts in 1" increments with threaded fasteners.
- Heavy-duty welded steel front and back frame construction. Lower side leg cross-bar for added strength and stability.
- Use with Standard Surfaces or Work Surfaces to construct a height adjustable table. Surfaces are not pre-drilled for these bases.
- Lower Shelves and Surface Accessory Brackets available; see below.
- Ships knocked down and is easily assembled with gusset plates.
- Load capacity 1,500 lbs. evenly distributed.

NOTES

» Standard and Work Surfaces sold separately; see section 4. Surfaces are not pre-drilled for these bases.
» Optional Lower Shelves sold separately; see page 3.28.
» Optional Surface Accessory Brackets sold separately; see Section 4.
» Travel range is measured from floor to bottom of surface.
» Optional Riser Frame available; see page 2.9 in the ErgoStat Pro Catalog.

How to Specify

Step 1. Product Number

FLPG

Step 2. Depth

24	24" deep	**30**	30" deep	**36**	36" deep
42	42" deep	**48**	48" deep		

Step 3. Width

36	36" wide	**48**	48" wide	**60**	60" wide
72	72" wide	**96**	96" wide		

Step 4. Paint Color Code

STANDARD

AS	Argent Silver	**GL**	Grey Light Smooth
AW	Arctic White	**GT**	Grey Light Texture
BK	Black	**NW**	Neutral White
BT	Black Texture	**ST**	Sand Texture

Product Number	Description	Width		Depth		Weight	
		in.	[mm]	in.	[mm]	lb.	[kg]
FLPG2436	Glides	32 ¾	832	20 ¾	527	54	24.5
FLPG2448	Glides	44 ¾	1137	20 ¾	527	59	26.8
FLPG2460	Glides	56 ¾	1441	20 ¾	527	63	28.6
FLPG2472	Glides	68 ¾	1746	20 ¾	527	67	30.4
FLPG2496	Glides	92 ¾	2356	20 ¾	527	75	34.0

cont'd

4-LEGGED TABLE, GLIDES *(Cont'd)*

Product Number	Description	Width		Depth		Weight	
		in.	[mm]	in.	[mm]	lb.	[kg]
FLPG3036	Glides	32 ¾	832	26 ¾	679	56	25.4
FLPG3048	Glides	44 ¾	1137	26 ¾	679	61	27.7
FLPG3060	Glides	56 ¾	1441	26 ¾	679	66	29.9
FLPG3072	Glides	68 ¾	1746	26 ¾	679	70	31.8
FLPG3096	Glides	92 ¾	2356	26 ¾	679	78	35.4
FLPG3636	Glides	32 ¾	832	32 ¾	832	60	27.2
FLPG3648	Glides	44 ¾	1137	32 ¾	832	64	29.0
FLPG3660	Glides	56 ¾	1441	32 ¾	832	68	30.8
FLPG3672	Glides	68 ¾	1746	32 ¾	832	72	32.7
FLPG3696	Glides	92 ¾	2356	32 ¾	832	81	36.7
FLPG4248	Glides	44 ¾	1137	38 ¾	984	68	30.8
FLPG4260	Glides	56 ¾	1441	38 ¾	984	74	33.6
FLPG4272	Glides	68 ¾	1746	38 ¾	984	79	35.8
FLPG4296	Glides	92 ¾	2356	38 ¾	984	84	38.1
FLPG4848	Glides	44 ¾	1137	44 ¾	1137	71	32.2
FLPG4860	Glides	56 ¾	1441	44 ¾	1137	75	34.0
FLPG4872	Glides	68 ¾	1746	44 ¾	1137	81	36.7
FLPG4896	Glides	92 ¾	2356	44 ¾	1137	87	39.5

Rev 11/23/26

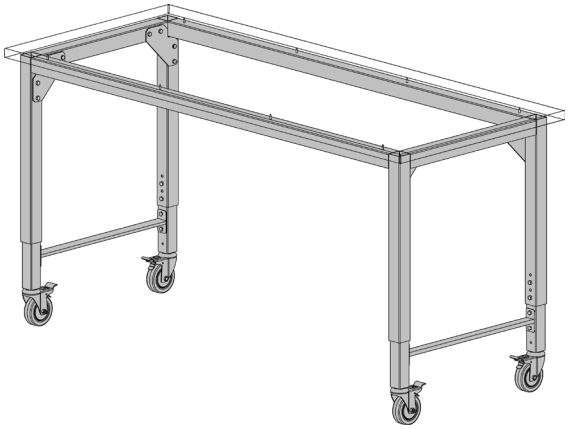

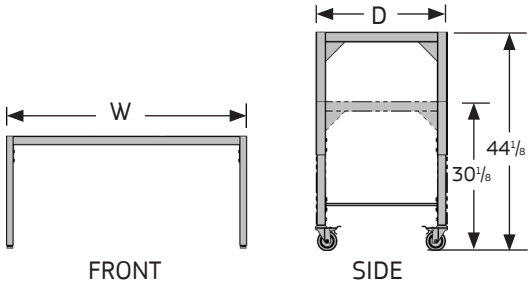

4-LEGGED TABLE, CASTERS

- Table has a 14" travel range measuring 30⅛" to 44⅛" from the floor to the bottom of the work surface. Adjusts in 1" increments with threaded fasteners.
- Heavy-duty welded steel front and back frame construction. Lower side leg cross-bar for added strength and stability.
- Includes 4" polypropylene casters with totalock brakes (simultaneously locks the swivel and wheel).
- Use with Standard or Work Surfaces to construct a height adjustable table. Surfaces are not pre-drilled for these bases.
- Lower Shelves and Surface Accessory Brackets available; see below.
- Ships knocked down and is easily assembled with gusset plates.
- Load capacity 1,500 lbs. evenly distributed.

NOTES

» Standard and Work Surfaces sold separately; see section 4. Surfaces are not pre-drilled for these bases.
» Optional Lower Shelves sold separately; see page 3.28.
» Optional Surface Accessory Brackets sold separately; see Section 4.
» Travel range is measured from floor to bottom of surface.

How to Specify

Step 1. Product Number

FLPC

Step 2. Depth

24 24" deep **30** 30" deep **36** 36" deep
42 42" deep **48** 48" deep

Step 3. Width

36 36" wide **48** 48" wide **60** 60" wide
72 72" wide **96** 96" wide

Step 4. Paint Color Code

STANDARD

AS Argent Silver **GL** Grey Light Smooth
AW Arctic White **GT** Grey Light Texture
BK Black **NW** Neutral White
BT Black Texture **ST** Sand Texture

Product Number	Description	Width		Depth		Weight	
		in.	[mm]	in.	[mm]	lb.	[kg]
FLPC2436	Casters	32 ¾	832	20 ¾	527	61	27.7
FLPC2448	Casters	44 ¾	1137	20 ¾	527	65	29.5
FLPC2460	Casters	56 ¾	1441	20 ¾	527	69	31.3
FLPC2472	Casters	68 ¾	1746	20 ¾	527	73	33.1
FLPC2496	Casters	92 ¾	2356	20 ¾	527	81	36.7

Cont'd

4-LEGGED TABLE, CASTERS *(Cont'd)*

Product Number	Description	Width		Depth		Weight	
		in.	[mm]	in.	[mm]	lb.	[kg]
FLPC3036	Casters	32 ¾	832	26 ¾	679	63	29.0
FLPC3048	Casters	44 ¾	1137	26 ¾	679	67	30.4
FLPC3060	Casters	56 ¾	1441	26 ¾	679	72	32.7
FLPC3072	Casters	68 ¾	1746	26 ¾	679	76	34.5
FLPC3096	Casters	92 ¾	2356	26 ¾	679	84	38.1
FLPC3636	Casters	32 ¾	832	32 ¾	832	66	29.9
FLPC3648	Casters	44 ¾	1137	32 ¾	832	70	31.8
FLPC3660	Casters	56 ¾	1441	32 ¾	832	74	33.6
FLPC3672	Casters	68 ¾	1746	32 ¾	832	78	35.4
FLPC3696	Casters	92 ¾	2356	32 ¾	832	87	39.5
FLPG4248	Casters	44 ¾	1137	38 ¾	984	71	32.2
FLPC4260	Casters	56 ¾	1441	38 ¾	984	78	35.4
FLPC4272	Casters	68 ¾	1746	38 ¾	984	83	37.6
FLPC4296	Casters	92 ¾	2356	38 ¾	984	88	39.9
FLPC4848	Casters	44 ¾	1137	44 ¾	1137	74	33.6
FLPC4860	Casters	56 ¾	1441	44 ¾	1137	79	35.8
FLPC4872	Casters	68 ¾	1746	44 ¾	1137	85	38.6
FLPC4896	Casters	92 ¾	2356	44 ¾	1137	91	41.3

Rev 11/24/26

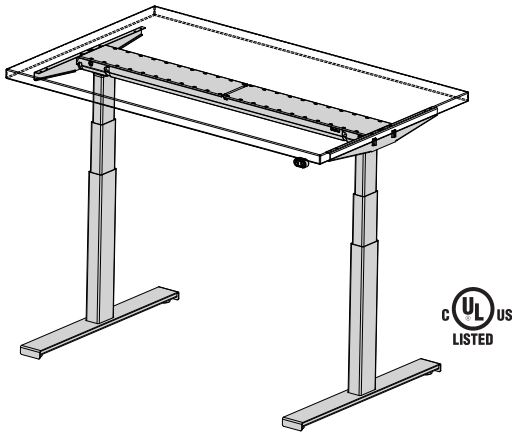

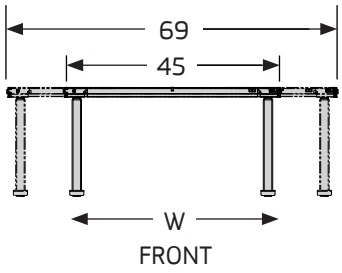

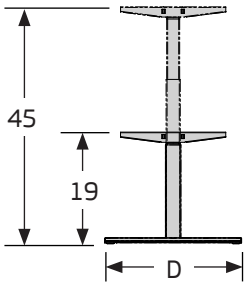

SYMPLE TABLE BASE, ELECTRIC, 26" TRAVEL RANGE

- Use with 24", 30" and 36" deep surfaces to construct a height adjustable table.
- Telescoping, expandable base with 28" D foot fits surface widths from 48" to 96".
- UL Listed Base has a 26" travel range, 19" to 45" measured from the underside of the surface.
- Built-in anti-collision technology.
- Dynamic load capacity of 350 pounds, evenly distributed.
- Base rises 1½" per second with a 5% duty cycle.
- Complies with: IEC/EN 60335-1 part 1. UL962 4th edition, UL2999 1st edition and CSA C22.2 No. 68-18 8th edition.
- Meets: ANSI/BIFMA X5.5: 2014 (up to 72")
- Includes a 9½' power cord and a standard hand control switch.
- Ships knocked down.

NOTES

» Surfaces sold separately; see Section 4.
» Travel range is measured from floor to bottom of surface.
» Base does not accommodate battery pack.

How to Specify

Step 1. Product Number

SWEG28J Glide Base, 26" Travel Range

Step 2. Paint Color Code

STANDARD
AS Argent Silver
AW Arctic White
BK Black

Product Number	Description	Width		Depth		Weight	
		in.	[mm]	in.	[mm]	lb.	[kg]
SWEG28J	Electric, 26" travel, glides	45 - 69	1143 - 1753	28	711	55	24.9

Rev 09/18/24

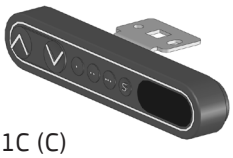
DPF1C (C)


DP1CS (E)

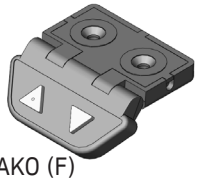
DPAK0 (F)


DPBK0 (G)


DPF1K (J)


DPF1M (K)

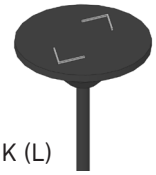
DPH1K (L)

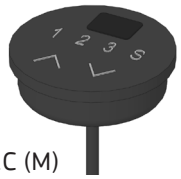

DPT1C (M)

HAND CONTROL SWITCHES - ELECTRIC BASE

- Optional hand control switches can replace the Symbiote standard DPF1K ("J" switch) included with electric ErgoStat, Table and WorkTable bases.
- Features include memory settings, digital feedback display and/or various mounting options. UL/CUL (US and Canada) recognized under UL962, File #E320513.
- Finish is Black.

NOTES

» Some switches may have an extended lead time.

How to Specify

Step 1. Product Number

DPF1C	C Switch
DP1CS	E Switch
DPAK0	F Switch
DPBK0	G Switch
DPF1K	J Switch, standard (included)
DPF1M	K Switch
DPH1K	L Switch
DPT1C	M Switch

Product Number	Description	Weight lb.	Weight [kg]
DPF1C (C)	Rocker switch, 3-memory settings, digital display, bracket mount	1	0.5
DP1CS (E)	Push-button, 3-memory settings, digital display, box mount	1	0.5
DPAK0 (F)	Push-button, hinge mount	1	0.5
DPBK0 (G)	Push-button, angled mount	1	0.5
DPF1K (J)	Standard Symbiote switch, push-button, bracket mount (included)	1	0.5
DPF1M (K)	Rocker switch, 3-memory settings, bracket mount	1	0.5
DPH1K (L)	Push-button, flush counterbore surface mount	1	0.5
DPT1C (M)	Touch panel, 3 memory settings, digital display, flush counterbore surface mount	1	0.5

Rev 08/15/24

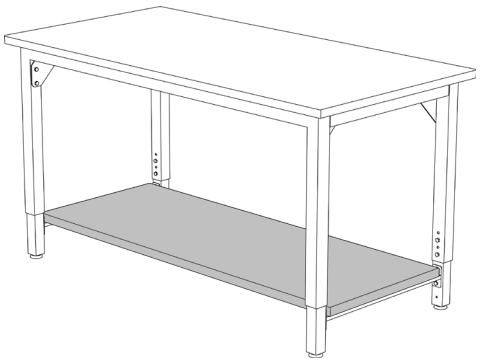

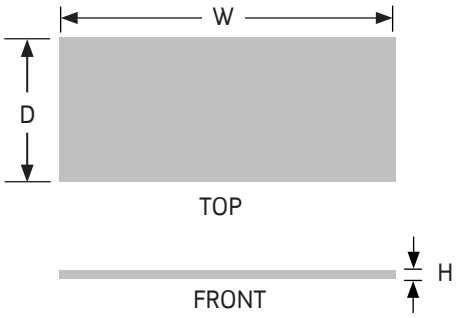

LOWER SHELF, 4-LEGGED TABLE

- A 1¼" high laminate Lower Shelf provides general storage below the surface on glide or caster 4-Legged Table bases.
- Available in full or half depth sizes.
- Load capacity for the half size Lower Shelf is 100 lbs. evenly distributed.
- Load capacity for the full size Lower Shelf is 200 lbs. evenly distributed.
- Lower Shelf attaches to the 4-Legged Table support bars with hook and loop strips.
- Lower Shelves have square corners with matching edge band.

NOTES

» Lower Shelf is not designed to work with Ergostat, WorkTable or Table Bases. See page 3.21 for other lower shelf options.

» Half size unavailable for 24" deep 4-Legged Tables.

How to Specify

Step 1. Product Number

FLSLH Half Depth
FLSLF Full Depth

Step 2. Depth

24 24" deep Full Depth only
30 30" deep Half and Full Depth
36 36" deep Half and Full Depth

Step 3. Width

48 48" wide **60** 60" wide **72** 72" wide

Step 4. Laminate Color Code

STANDARD

AW Arctic White
BK Black
GF Grey Fleck
GL Grey Light Smooth
NW Neutral White
SA Sand
WF White Fleck

Product Number	Description	Height		Width		Depth		Weight	
		in.	[mm]	in.	[mm]	in.	[mm]	lb.	[kg]
FLSLH3048	Lower shelf, half depth	1 ¼	32	44	1118	11	279	19	8.6
FLSLH3060	Lower shelf, half depth	1 ¼	32	56	1422	11	279	23	10.4
FLSLH3072	Lower shelf, half depth	1 ¼	32	68	1727	11	279	27	12.2
FLSLH3648	Lower shelf, half depth	1 ¼	32	44	1118	14	356	23	10.4
FLSLH3660	Lower shelf, half depth	1 ¼	32	56	1422	14	356	29	13.2
FLSLH3672	Lower shelf, half depth	1 ¼	32	68	1727	14	356	36	16.3
FLSLF2448	Lower shelf, full depth	1 ¼	32	44	1118	16	406	26	11.8
FLSLF2460	Lower shelf, full depth	1 ¼	32	56	1422	16	406	34	15.4
FLSLF2472	Lower shelf, full depth	1 ¼	32	68	1727	16	406	40	18.1
FLSLF3048	Lower shelf, full depth	1 ¼	32	44	1118	22	559	38	17.2
FLSLF3060	Lower shelf, full depth	1 ¼	32	56	1422	22	559	46	20.9
FLSLF3072	Lower shelf, full depth	1 ¼	32	68	1727	22	559	54	24.5
FLSLF3648	Lower shelf, full depth	1 ¼	32	44	1118	28	711	46	20.9
FLSLF3660	Lower shelf, full depth	1 ¼	32	56	1422	28	711	58	26.3
FLSLF3672	Lower shelf, full depth	1 ¼	32	68	1727	28	711	72	32.7

Rev 06/20/24

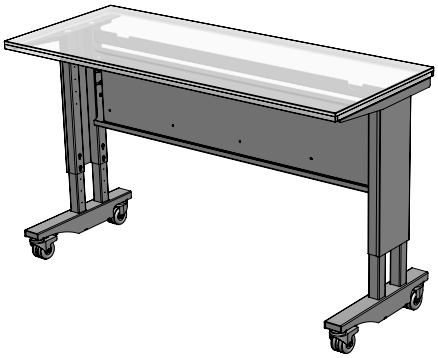

TFCPC
(casters)

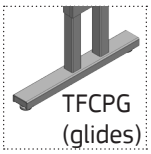

TFCPG
(glides)

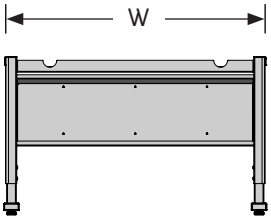

FRONT

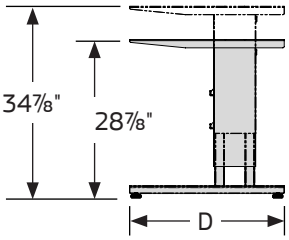

SIDE

TETRAD TABLE, C-STYLE

- Use with 24" and 30" deep worksurfaces.
- Load capacity 880 lbs. evenly distributed.
- Available with leveling glides or 3" polypropylene locking casters on the front and 3" non-locking casters on the back.
- Table is manually adjustable with threaded fasteners and has 6.5" of travel range measuring from 28.875" to 35.875" from the floor to the underside of the worksurface.
- Included integrated Modesty Panel, Hanging Rail (single-sided only) and Cable Tray.

NOTES

» Standard work surfaces sold separately; see section 4.
» Optional lower shelf sold separately; see page 3.32.
» Optional Rail Mounted Tote Holder; see page 12.7.

How to Specify

Step 1. Product Number

TFCPC Caster Base
TFCPG Glide Base

Step 2. Depth

24 24" deep **30** 30" deep

Step 3. Width

36 36" wide **48** 48" wide **60** 60" wide
72 72" wide

Step 4. Paint Color Code

STANDARD

AS Argent Silver
AW Arctic White
BK Black
BT Black Texture
GL Grey Light Smooth
GT Grey Light Texture
NW Neutral White
ST Sand Texture

Product Number	Description	Width		Depth		Weight	
		in.	[mm]	in.	[mm]	lb.	[kg]
TFCPC2436	Manually adjustable, 6" travel range, casters	35 ⅔	899	24	610	71	32.3
TFCPC2448	Manually adjustable, 6" travel range, casters	47 ⅔	1204	24	610	79	35.8
TFCPC2460	Manually adjustable, 6" travel range, casters	59 ⅔	1509	24	610	86	39.2
TFCPC2472	Manually adjustable, 6" travel range, casters	71 ⅔	1813	24	610	94	42.7
TFCPC3036	Manually adjustable, 6" travel range, casters	35 ⅔	899	30	762	77	35.1
TFCPC3048	Manually adjustable, 6" travel range, casters	47 ⅔	1204	30	762	85	38.5
TFCPC3060	Manually adjustable, 6" travel range, casters	59 ⅔	1509	30	762	92	41.9
TFCPC3072	Manually adjustable, 6" travel range, casters	71 ⅔	1813	30	762	100	45.4
TFCPG2436	Manually adjustable, 6" travel range, glides	35 ⅔	899	24	610	64	29.2
TFCPG2448	Manually adjustable, 6" travel range, glides	47 ⅔	1204	24	610	72	32.6
TFCPG2460	Manually adjustable, 6" travel range, glides	59 ⅔	1509	24	610	79	36.0
TFCPG2472	Manually adjustable, 6" travel range, glides	71 ⅔	1813	24	610	87	39.5
TFCPG3036	Manually adjustable, 6" travel range, glides	35 ⅔	899	30	762	67	30.5
TFCPG3048	Manually adjustable, 6" travel range, glides	47 ⅔	1204	30	762	75	34.0
TFCPG3060	Manually adjustable, 6" travel range, glides	59 ⅔	1509	30	762	82	37.3
TFCPG3072	Manually adjustable, 6" travel range, glides	71 ⅔	1813	30	762	90	40.9

Rev 03/12/26

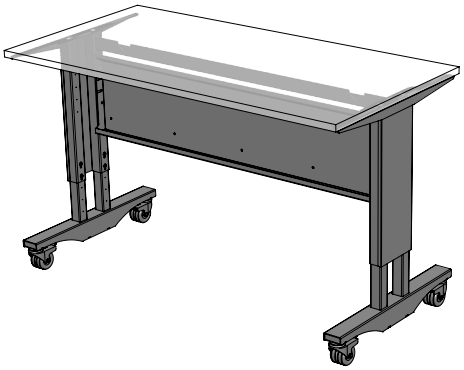

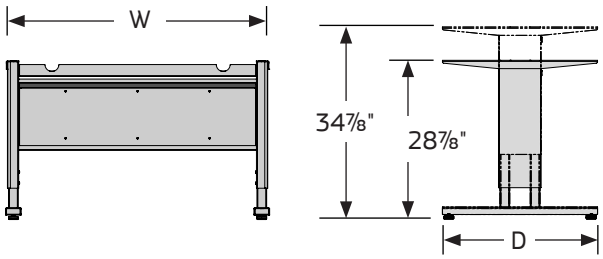

TETRAD TABLE, T-STYLE

- Use with 30" and 36" deep worksurfaces.
- Load capacity 880 lbs. evenly distributed.
- Available with leveling glides or 3" polypropylene locking casters on the front and 3" non-locking casters on the back.
- Table is manually adjustable with threaded fasteners and has 6.5" of travel range measuring from 28.875" to 35.875" from the floor to the underside of the worksurface.
- Integrated Modesty Panel / Hanging Rail and Cable Tray.

TETRAD TABLE HANGING KIT

- Allows for back to back Rail Mounted Tote Frame Holder configurations on Tetrad Table, T-Style bases.

NOTES

» Standard work surfaces sold separately; see section 4.
» Optional lower shelf sold separately; see page 3.32.
» Optional Rail Mounted Tote Holder; see page 12.7.

How to Specify

Step 1. Product Number

TFTPC Caster Base
TFTPG Glide Base
TFDHKT Hanging Kit

Step 2. Depth (TFTPC & TFTPG Only)

30 30" deep **36** 36" deep

Step 3. Width

36 36" wide **48** 48" wide **60** 60" wide
72 72" wide

Step 4. Paint Color Code

STANDARD

AS Argent Silver
AW Arctic White
BK Black
BT Black Texture
GL Grey Light Smooth
GT Grey Light Texture
NW Neutral White
ST Sand Texture

Product Number	Description	Width		Depth		Weight	
		in.	[mm]	in.	[mm]	lb.	[kg]
TFTPC3036	Manually adjustable, 6" travel range, casters	35 ⅔	899	30	762	77	35.1
TFTPC3048	Manually adjustable, 6" travel range, casters	47 ⅔	1204	30	762	85	38.5
TFTPC3060	Manually adjustable, 6" travel range, casters	59 ⅔	1509	30	762	92	41.9
TFTPC3072	Manually adjustable, 6" travel range, casters	71 ⅔	1813	30	762	100	45.4
TFTPC3636	Manually adjustable, 6" travel range, casters	35 ½	900	36	914	79	36.0
TFTPC3648	Manually adjustable, 6" travel range, casters	47 ½	1205	36	914	87	39.4
TFTPC3660	Manually adjustable, 6" travel range, casters	59 ½	1509	36	914	94	42.8
TFTPC3672	Manually adjustable, 6" travel range, casters	71 ½	1814	36	914	102	46.3
TFTPG3036	Manually adjustable, 6" travel range, glides	35 ⅔	899	30	762	67	30.5
TFTPG3048	Manually adjustable, 6" travel range, glides	47 ⅔	1204	30	762	75	34.0
TFTPG3060	Manually adjustable, 6" travel range, glides	59 ⅔	1509	30	762	82	37.3
TFTPG3072	Manually adjustable, 6" travel range, glides	71 ⅔	1813	30	762	90	40.9

Cont'd

TETRAD TABLE, T-STYLE *(Cont'd)*

Product Number	Description	Width		Depth		Weight	
		in.	[mm]	in.	[mm]	lb.	[kg]
TFTPG3636	Manually adjustable, 6" travel range, glides	35 ½	900	36	914	69	31.4
TFTPG3648	Manually adjustable, 6" travel range, glides	47 ½	1205	36	914	77	34.9
TFTPG3660	Manually adjustable, 6" travel range, glides	59 ½	1509	36	914	84	38.3
TFTPG3672	Manually adjustable, 6" travel range, glides	71 ½	1814	36	914	92	41.8
TFDHKT36	Hanging Kit	29 ⅜	752	2.5	64	5	2.3
TFDHKT48	Hanging Kit	41 ⅜	1056	2.5	64	7	3.3
TFDHKT60	Hanging Kit	53 ⅜	1361	2.5	64	9	4.2
TFDHKT72	Hanging Kit	65 ⅜	1666	2.5	64	11	5.1

Rev 03/12/26

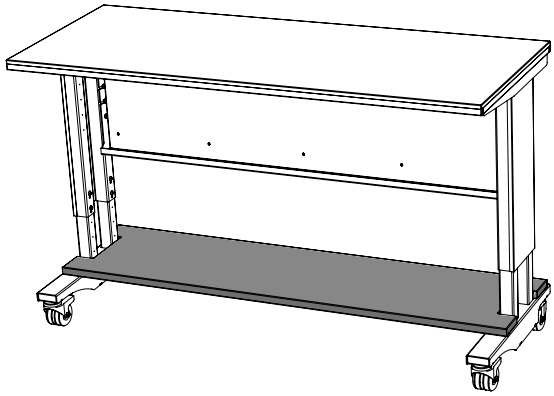

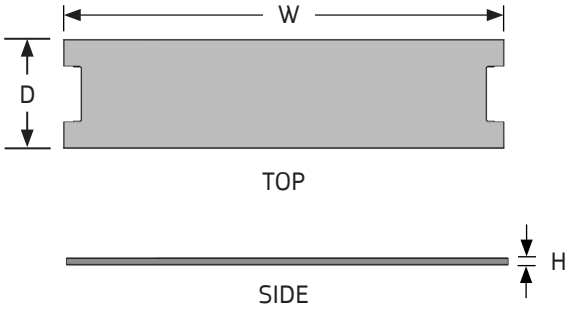

TETRAD TABLE LOWER SHELF

- Lower shelf provides general storage below the Tetrad Table work surface.
- Mounts on both Tetrad T-Style and C-Style, glide and caster base options.
- Works well for storing equipment, reagent supplies or heavy boxes.
- No hardware or tools are required for assembly.
- Load capacity 200 lbs. evenly distributed.

How to Specify

Step 1. Product Number

TFLSM15 Lower Shelf, 15" deep

Step 2. Width

36 36" wide **48** 48" wide **60** 60" wide
72 72" wide

Step 3. Paint Color Code

STANDARD

AS Argent Silver
AW Arctic White
BK Black
BT Black Texture
GL Grey Light Smooth
GT Grey Light Texture
NW Neutral White
ST Sand Texture

Product Number	Description	Height		Width		Depth		Weight	
		in.	[mm]	in.	[mm]	in.	[mm]	lb.	[kg]
TFLSM1536	Lower Shelf, Tetrad Table	1	25	35 ⅓	898	15	381	12	5.3
TFLSM1548	Lower Shelf, Tetrad Table	1	25	47 ⅓	1203	15	381	19	8.8
TFLSM1560	Lower Shelf, Tetrad Table	1	25	59 ⅓	1508	15	381	24	11.0
TFLSM1572	Lower Shelf, Tetrad Table	1	25	71 ⅓	1813	15	381	29	13.2

Rev 02/13/25

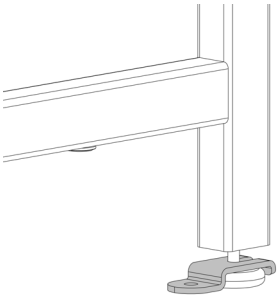

(UltraFrame)

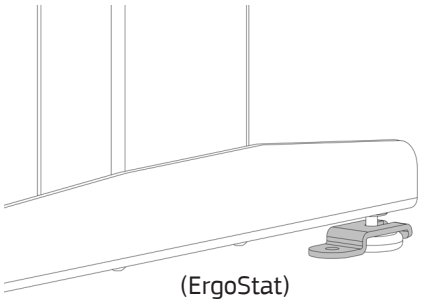

(ErgoStat)

EQGBK

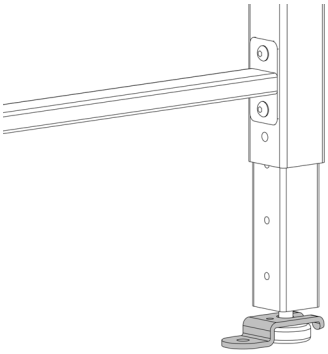

(4-Legged Table)

EQG4LBK

EARTHQUAKE GLIDE CLIPS

- Earthquake Glide Clips (EQGBK) are mounted over the glides of UltraFrames, Ultra Legs, ErgoStats, Table Bases, Work Tables and Tetrad Tables. Specify one EQGBK per glide.
- Earthquake Glide Clips for 4-Legged Tables (EQG4LBK) are mounted over the glides of 4-Legged Tables with glides and Tetrad Tables with glides.
- Sold individually.
- Finish is Black.

NOTES

» The EQGBK and EQG4LBK need to be secured to the floor structure using the appropriate fasteners as defined/required by local code.

How to Specify

Step 1. Product Number

EQGBK
EQG4LBK

Product Number	Description	Height in. Min.	Height in. Max.	Height [mm] Min.	Height [mm] Max.	Width in.	Width [mm]	Depth in.	Depth [mm]	Weight lb.	Weight [kg]
EQGBK	Glide Clip	0.690		17.526		1.500	38.100	3.916	99.458	0.292	0.132
EQG4LBK	Glide Clips, 4-Legged Table	0.813		20.650		1.500	38.100	3.909	99.297	0.278	0.126

Rev 09/09/25

SURFACES & SUPPORTS

Ultra Surfaces, Std. Laminate, Square Edge 4.2
Ultra Surfaces, ESD Laminate, Square Edge 4.3
Ultra Surfaces, Chemsurf Lam., Square Edge 4.5
Ultra Surfaces, Hardwood, 1¼", Full-Radius Edge 4.6
Ultra Surfaces, Hardwood, 1¾", Square Edge 4.7
Ultra Surfaces, Stainless Steel 4.8
Phenolic Systems Surfaces 4.9
Corian Systems Surfaces 4.10
Std. Surfaces, Std. Laminate, Square Edge 4.11
Std. Surfaces, ESD Laminate, Square Edge 4.12
Std. Surfaces, Chemsurf Lam., Square Edge 4.14
Work Surfaces, Standard Laminate, T-Edge 4.15
Work Surfaces, Std. Laminate, Square Edge 4.16
Work Surfaces, ESD Laminate, T-Edge 4.17
Work Surfaces, ESD Laminate, Square Edge 4.18
Work Surfaces, Chemsurf Laminate, T-Edge 4.19
Work Surfaces, Chemsurf Lam., Square Edge 4.20
Work Surfaces, Hardwood, 1¼", Full-Radius Edge 4.21
Work Surfaces, Hardwood, 1¾", Square Edge 4.22
Work Surfaces, Stainless Steel 4.23
Surface B Support Brackets 4.24
Surface Cantilever Supports 4.25
Frame-Mount Surface Supports 4.26
Surface Reinforcement Bars 4.27
Surface Support Bar 4.28
Surface Accessory Brackets 4.29
Surface Back Stops 4.30
Phenolic Backsplashes 4.31
Surface Gap Fillers and Leveling Plates 4.32
Phenolic Gap Fillers 4.33
Corian Backsplashes 4.34
Epoxy Backsplashes 4.35
Auxiliary Surface 4.36

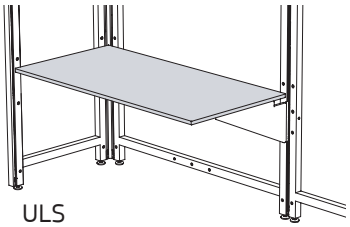
ULS

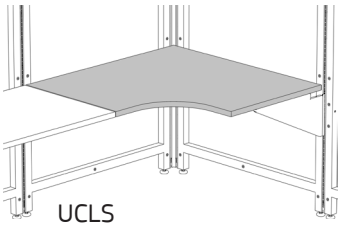
UCLS

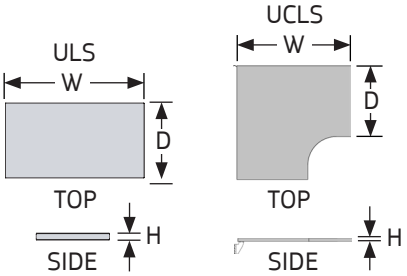

ULTRA SURFACES, STD. LAMINATE, SQUARE EDGE

- 1¼" tall, high pressure laminate surfaces mount to ErgoStats®, Table Bases and UltraFrames.
- Surfaces have square corners with matching square edge-band.
- Surfaces are predrilled for supports and most accessories.
- Corner surfaces include one corner bracket.
- Load capacity is 500 lb. capacity, evenly distributed.

NOTES

» For corner surfaces order left- and right-side supports separately; see pages 4.24 - 4.26.

» Surface supports sold separately; see pages 4.24 - 4.26.

» 72" and 96" wide frame-mounted surfaces must be supported in the center by Surface Cantilever Supports. Specify one 18" cantilever per 24" and 30" deep surface and one 24" cantilever per 36" deep surface.

How to Specify

Step 1. Product Number

ULS Rectangular Surface, Square Edge
UCLS Corner Surface, Square Edge

Step 2. Depth

24 24" deep **30** 30" deep **36** 36" deep

Step 3. Width (Corner is 48" only)

24 24" wide **30** 30" wide **36** 36" wide
48 48" wide **60** 60" wide **72** 72" wide
96 96" wide

Step 4. Laminate Color Code

AW Arctic White **NW** Neutral White
BK Black **SA** Sand
GF Grey Fleck **WF** White Fleck
GL Grey Light

Product Number	Description	Height		Width		Depth		Weight	
		in.	[mm]	in.	[mm]	in.	[mm]	lb.	[kg]
ULS2424	Standard laminate, square edge	1 ¼	32	24	610	24	610	22	10.0
ULS2430	Standard laminate, square edge	1 ¼	32	30	762	24	610	24	10.9
ULS2436	Standard laminate, square edge	1 ¼	32	36	914	24	610	29	13.2
ULS2448	Standard laminate, square edge	1 ¼	32	48	1219	24	610	36	16.3
ULS2460	Standard laminate, square edge	1 ¼	32	60	1524	24	610	45	20.4
ULS2472	Standard laminate, square edge	1 ¼	32	72	1829	24	610	54	24.5
ULS2496	Standard laminate, square edge	1 ¼	32	96	2438	24	610	72	32.7
ULS3024	Standard laminate, square edge	1 ¼	32	24	610	30	762	24	10.9
ULS3030	Standard laminate, square edge	1 ¼	32	30	762	30	762	30	13.6
ULS3036	Standard laminate, square edge	1 ¼	32	36	914	30	762	36	16.3
ULS3048	Standard laminate, square edge	1 ¼	32	48	1219	30	762	45	20.4
ULS3060	Standard laminate, square edge	1 ¼	32	60	1524	30	762	56	25.4
ULS3072	Standard laminate, square edge	1 ¼	32	72	1829	30	762	67	30.4
ULS3096	Standard laminate, square edge	1 ¼	32	96	2438	30	762	90	40.8
ULS3624	Standard laminate, square edge	1 ¼	32	24	610	36	762	26	11.8
ULS3630	Standard laminate, square edge	1 ¼	32	30	762	36	914	36	16.3
ULS3636	Standard laminate, square edge	1 ¼	32	36	914	36	914	43	19.5
ULS3648	Standard laminate, square edge	1 ¼	32	48	1219	36	914	54	24.5
ULS3660	Standard laminate, square edge	1 ¼	32	60	1524	36	914	67	30.4
ULS3672	Standard laminate, square edge	1 ¼	32	72	1829	36	914	80	36.3
ULS3696	Standard laminate, square edge	1 ¼	32	96	2438	36	914	108	49.0
UCLS2448	Standard laminate, corner, square edge	1 ¼	32	48	1219	24	610	72	32.7
UCLS3048	Standard laminate, corner, square edge	1 ¼	32	48	1219	30	762	74	33.6
UCLS3648	Standard laminate, corner, square edge	1 ¼	32	48	1219	36	914	78	35.4

Rev 11/23/26

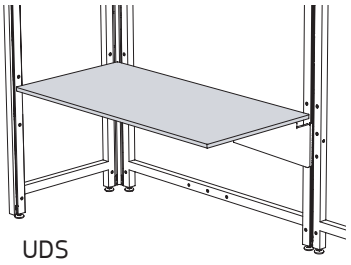
UDS

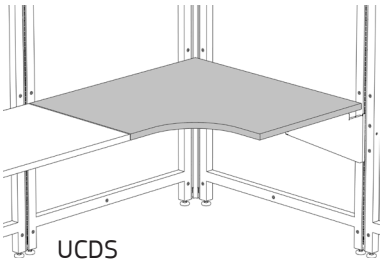
UCDS

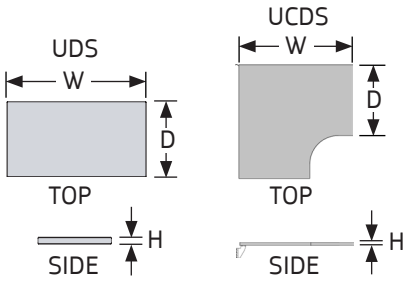

ULTRA SURFACES, ESD LAMINATE, SQUARE EDGE

- 1¼" tall high pressure laminate surfaces mount to ErgoStats®, Table Bases and UltraFrames.
- Symbiote dissipative surfaces are manufactured with Nevamar® Static Dissipative Laminates (SDL). Nevamar SDL is manufactured to have a point to point and point to ground resistance of 1 x 106 to 1 x 109 ohms @ 10-60% relative humidity. Nevamar SDL conforms to ESD Association Standard ESD-S4.1.
- Dissipative surfaces include a Laminate Grounding Terminal Kit.
- Surfaces have square corners with matching square edge-band.
- Corner surfaces include one corner bracket.
- Surfaces are predrilled for supports and most accessories.
- Load capacity is 500 lbs. evenly distributed.

NOTES

» For corner surfaces order left- and right-side supports separately; see pages 4.24 - 4.26.

» Surface supports sold separately; see pages 4.24 - 4.26.

» 72" and 96" wide frame-mounted surfaces must be supported in the center by Surface Cantilever Supports. Specify one 18" cantilever per 24" and 30" deep surface and one 24" cantilever per 36" deep surface.

» Customers are responsible for specifying ESD surface requirements; corporate ESD standards must be consulted prior to ordering.

How to Specify

Step 1. Product Number

UDS Rectangular Surface, Square Edge
UCDS Corner Surface, Square Edge

Step 2. Depth

24 24" deep **30** 30" deep **36** 36" deep

Step 3. Width (Corner is 48" only)

24 24" wide **30** 30" wide **36** 36" wide
48 48" wide **60** 60" wide **72** 72" wide
96 96" wide

Step 4. Laminate Color Code

DBK Dissipative Black
DG Dissipative Grey
DNW Dissipative Neutral White
DW Dissipative White

Product Number	Description	Height		Width		Depth		Weight	
		in.	[mm]	in.	[mm]	in.	[mm]	lb.	[kg]
UDS2424	ESD laminate, square edge	1 ¼	32	24	610	24	610	22	10.0
UDS2430	ESD laminate, square edge	1 ¼	32	30	762	24	610	24	10.9
UDS2436	ESD laminate, square edge	1 ¼	32	36	914	24	610	29	13.2
UDS2448	ESD laminate, square edge	1 ¼	32	48	1219	24	610	36	16.3
UDS2460	ESD laminate, square edge	1 ¼	32	60	1524	24	610	45	20.4
UDS2472	ESD laminate, square edge	1 ¼	32	72	1829	24	610	54	24.5
UDS2496	ESD laminate, square edge	1 ¼	32	96	2438	24	610	72	32.7
UDS3024	ESD laminate, square edge	1 ¼	32	24	610	30	762	24	10.9
UDS3030	ESD laminate, square edge	1 ¼	32	30	762	30	762	30	13.6
UDS3036	ESD laminate, square edge	1 ¼	32	36	914	30	762	36	16.3
UDS3048	ESD laminate, square edge	1 ¼	32	48	1219	30	762	45	20.4
UDS3060	ESD laminate, square edge	1 ¼	32	60	1524	30	762	56	25.4
UDS3072	ESD laminate, square edge	1 ¼	32	72	1829	30	762	67	30.4
UDS3096	ESD laminate, square edge	1 ¼	32	96	2438	30	762	90	40.8

Cont'd

ULTRA SURFACES, ESD LAMINATE, SQUARE EDGE *(Cont'd)*

Product Number	Description	Height		Width		Depth		Weight	
		in.	[mm]	in.	[mm]	in.	[mm]	lb.	[kg]
UDS3624	ESD laminate, square edge	1 ¼	32	24	610	36	762	26	11.8
UDS3630	ESD laminate, square edge	1 ¼	32	30	762	36	914	36	16.3
UDS3636	ESD laminate, square edge	1 ¼	32	36	914	36	914	43	19.5
UDS3648	ESD laminate, square edge	1 ¼	32	48	1219	36	914	54	24.5
UDS3660	ESD laminate, square edge	1 ¼	32	60	1524	36	914	67	30.4
UDS3672	ESD laminate, square edge	1 ¼	32	72	1829	36	914	80	36.3
UDS3696	ESD laminate, square edge	1 ¼	32	96	2438	36	914	108	49.0
UCDS2448	ESD laminate, corner, square edge	1 ¼	32	48	1219	24	610	72	32.7
UCDS3048	ESD laminate, corner, square edge	1 ¼	32	48	1219	30	762	74	33.6
UCDS3648	ESD laminate, corner, square edge	1 ¼	32	48	1219	36	914	78	35.4

Rev 11/24/26

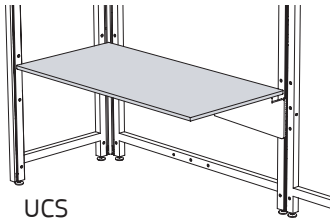
UCS

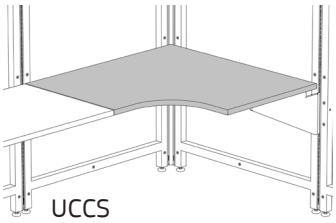
UCCS

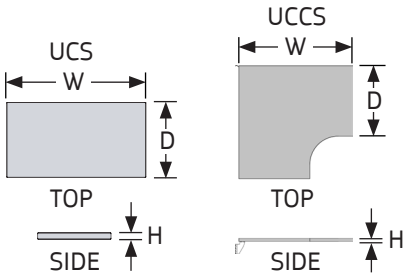

ULTRA SURFACES, CHEMSURF LAM., SQUARE EDGE

- 1¼" tall high pressure Chemsurf laminate surfaces are made for highly corrosive environments with exceptional chemical and wear resistance.
- Surfaces mount to ErgoStats®, Table Bases and UltraFrames.
- Surfaces have square corners with a matching square edge band.
- Surfaces are predrilled for supports and most accessories.
- Corner surfaces include one corner bracket.
- Load capacity 500 lbs. evenly distributed.

NOTES

» For corner surfaces order left- and right-side supports separately; see pages 4.24 - 4.26.

» Surface supports sold separately; see pages 4.24 - 4.26.

» 72" and 96" wide frame-mounted surfaces must be supported in the center by Surface Cantilever Supports. Specify one 18" cantilever per 24" and 30" deep surface and one 24" cantilever per 36" deep surface.

How to Specify

Step 1. Product Number

UCS Rectangular Surface, Square Edge
UCCS Corner Surface, Square Edge

Step 2. Depth

24 24" deep **30** 30" deep **36** 36" deep

Step 3. Width (Corner is 48" only)

24 24" wide **30** 30" wide **36** 36" wide
48 48" wide **60** 60" wide **72** 72" wide
96 96" wide

Step 4. Laminate Color Code

CBK Black
CGL Grey Light
CNW Neutral White

Product Number	Description	Height		Width		Depth		Weight	
		in.	[mm]	in.	[mm]	in.	[mm]	lb.	[kg]
UCS2424	Chemsurf laminate, square edge	1 ¼	32	24	610	24	610	22	10.0
UCS2430	Chemsurf laminate, square edge	1 ¼	32	30	762	24	610	24	10.9
UCS2436	Chemsurf laminate, square edge	1 ¼	32	36	914	24	610	29	13.2
UCS2448	Chemsurf laminate, square edge	1 ¼	32	48	1219	24	610	36	16.3
UCS2460	Chemsurf laminate, square edge	1 ¼	32	60	1524	24	610	45	20.4
UCS2472	Chemsurf laminate, square edge	1 ¼	32	72	1829	24	610	54	24.5
UCS2496	Chemsurf laminate, square edge	1 ¼	32	96	2438	24	610	72	32.7
UCS3024	Chemsurf laminate, square edge	1 ¼	32	24	610	30	762	24	10.9
UCS3030	Chemsurf laminate, square edge	1 ¼	32	30	762	30	762	30	13.6
UCS3036	Chemsurf laminate, square edge	1 ¼	32	36	914	30	762	36	16.3
UCS3048	Chemsurf laminate, square edge	1 ¼	32	48	1219	30	762	45	20.4
UCS3060	Chemsurf laminate, square edge	1 ¼	32	60	1524	30	762	56	25.4
UCS3072	Chemsurf laminate, square edge	1 ¼	32	72	1829	30	762	67	30.4
UCS3096	Chemsurf laminate, square edge	1 ¼	32	96	2438	30	762	90	40.8
UCS3624	Chemsurf laminate, square edge	1 ¼	32	24	610	36	762	26	11.8
UCS3630	Chemsurf laminate, square edge	1 ¼	32	30	762	36	914	36	16.3
UCS3636	Chemsurf laminate, square edge	1 ¼	32	36	914	36	914	43	19.5
UCS3648	Chemsurf laminate, square edge	1 ¼	32	48	1219	36	914	54	24.5
UCS3660	Chemsurf laminate, square edge	1 ¼	32	60	1524	36	914	67	30.4
UCS3672	Chemsurf laminate, square edge	1 ¼	32	72	1829	36	914	80	36.3
UCS3696	Chemsurf laminate, square edge	1 ¼	32	96	2438	36	914	108	49.0
UCCS2448	Chemsurf laminate, corner, square edge	1 ¼	32	48	1219	24	610	72	32.7
UCCS3048	Chemsurf laminate, corner, square edge	1 ¼	32	48	1219	30	762	74	33.6
UCCS3648	Chemsurf laminate, corner, square edge	1 ¼	32	48	1219	36	914	78	35.4

Rev 11/23/26

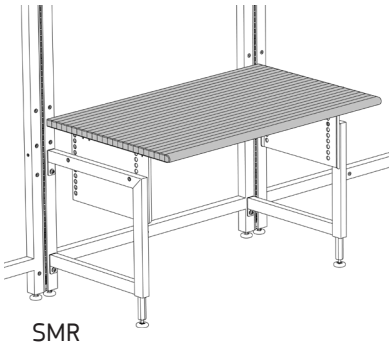

SMR

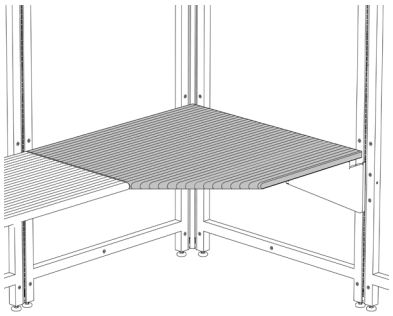

SMCR

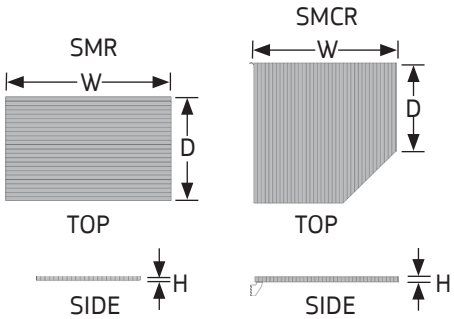

ULTRA SURFACES, HARDWOOD, 1¼" FULL RADIUS EDGE

- 1¼" tall Hardwood Surfaces mount to ErgoStats®, Table Bases and UltraFrames.
- Surfaces consist of kiln-dried hardwood strips that are face glued, sanded smooth and finished with a two coat catalyzed varnish.
- 1¼" tall Hardwood has a full radius front edge with square-edged backs and sides.
- Corner surfaces include one corner bracket.
- Surfaces are predrilled for supports and most accessories.
- Load capacity 500 lbs. evenly distributed.

NOTES

» For corner surfaces order left- and right-side supports separately; see pages 4.24 - 4.26.

» Surface supports sold separately; see pages 4.24 - 4.26.

» 72" and 96" wide frame-mounted surfaces must be supported in the center by Surface Cantilever Supports. Specify one 18" cantilever per 30" deep surface and one 24" cantilever per 36" deep surface.

How to Specify

Step 1. Product Number

SMR Rectangular Surface, Full Radius Edge
SMCR Corner Surface, Full Radius Edge

Step 2. Depth

30 30" deep **36** 36" deep

Step 3. Width (Corner is 48" only)

24 24" wide **30** 30" wide **36** 36" wide
48 48" wide **60** 60" wide **72** 72" wide
96 96" wide

Step 4. Color

CC Hardwood

Product Number	Description	Height		Width		Depth		Weight	
		in.	[mm]	in.	[mm]	in.	[mm]	lb.	[kg]
SMR3024CC	Hardwood, 1¼", full-radius edge	1 ¼	32	24	610	30	610	25	11.3
SMR3030CC	Hardwood, 1¼", full-radius edge	1 ¼	32	30	762	30	610	31	14.1
SMR3036CC	Hardwood, 1¼", full-radius edge	1 ¼	32	36	914	30	610	38	17.2
SMR3048CC	Hardwood, 1¼", full-radius edge	1 ¼	32	48	1219	30	610	50	22.7
SMR3060CC	Hardwood, 1¼", full-radius edge	1 ¼	32	60	1524	30	610	63	28.6
SMR3072CC	Hardwood, 1¼", full-radius edge	1 ¼	32	72	1829	30	610	75	34.0
SMR3096CC	Hardwood, 1¼", full-radius edge	1 ¼	32	96	2438	30	610	100	45.4
SMR3636CC	Hardwood, 1¼", full-radius edge	1 ¼	32	36	914	36	914	45	20.4
SMR3648CC	Hardwood, 1¼", full-radius edge	1 ¼	32	48	1219	36	914	60	27.2
SMR3660CC	Hardwood, 1¼", full-radius edge	1 ¼	32	60	1524	36	914	75	34.0
SMR3672CC	Hardwood, 1¼", full-radius edge	1 ¼	32	72	1829	36	914	90	40.8
SMR3696CC	Hardwood, 1¼", full-radius edge	1 ¼	32	96	2438	36	914	120	54.4
SMCR3048CC	Hardwood, Corner, 1¼", full-radius edge	1 ¼	32	48	1219	30	762	74	33.6
SMCR3648CC	Hardwood, Corner, 1¼", full-radius edge	1 ¼	32	48	1219	36	914	78	35.4

Rev 11/23/26

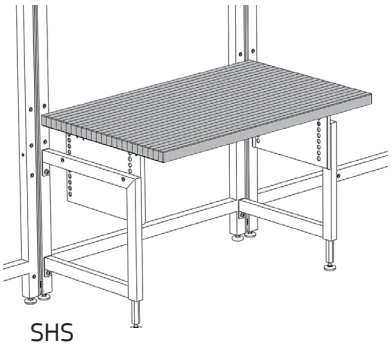
SHS

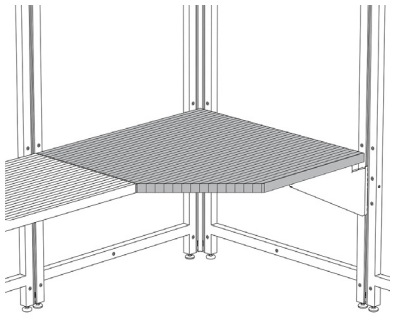
SHCS

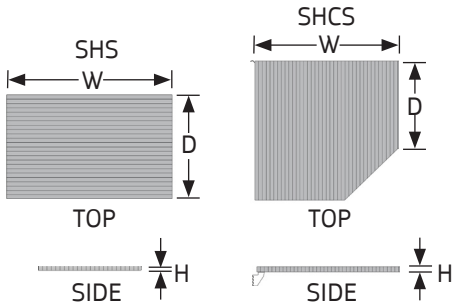

ULTRA SURFACES, HARDWOOD, 1¾" SQUARE EDGE

- 1¾" tall Hardwood Surfaces mount to ErgoStats®, Table Bases and UltraFrames..
- Surfaces consist of kiln-dried hardwood strips that are face glued, sanded smooth and finished with a two coat catalyzed varnish.
- 1¾" tall Hardwood has a square-edged front, back and sides.
- Corner surfaces include one corner bracket.
- Surfaces are predrilled for supports and most accessories.
- Load capacity 500 lbs. evenly distributed.

NOTES

» For corner surfaces order left- and right-side supports separately; see pages 4.24 - 4.26.

» Surface supports sold separately; see pages 4.24 - 4.26.

» 72" and 96" wide frame-mounted surfaces must be supported in the center by Surface Cantilever Supports. Specify one 18" cantilever per 30" deep surface and one 24" cantilever per 36" deep surface.

How to Specify

Step 1. Product Number

SHS Rectangular Surface, Square Edge
SHCS Corner Surface, Square Edge

Step 2. Depth

30 30" deep **36** 36" deep

Step 3. Width (Corner is 48" only)

24 24" wide **30** 30" wide **36** 36" wide
48 48" wide **60** 60" wide **72** 72" wide
96 96" wide

Step 4. Color

CC Hardwood

Product Number	Description	Height		Width		Depth		Weight	
		in.	[mm]	in.	[mm]	in.	[mm]	lb.	[kg]
SHS3024CC	Hardwood, 1¾", square edge	1 ¾	44	24	610	30	610	35	15.9
SHS3030CC	Hardwood, 1¾", square edge	1 ¾	44	30	762	30	610	43	19.5
SHS3036CC	Hardwood, 1¾", square edge	1 ¾	44	36	914	30	610	53	24.0
SHS3048CC	Hardwood, 1¾", square edge	1 ¾	44	48	1219	30	610	70	31.8
SHS3060CC	Hardwood, 1¾", square edge	1 ¾	44	60	1524	30	610	88	39.9
SHS3072CC	Hardwood, 1¾", square edge	1 ¾	44	72	1829	30	610	105	47.6
SHS3096CC	Hardwood, 1¾", square edge	1 ¾	44	96	2438	30	610	140	63.5
SHS3636CC	Hardwood, 1¾", square edge	1 ¾	44	36	914	36	914	63	28.6
SHS3648CC	Hardwood, 1¾", square edge	1 ¾	44	48	1219	36	914	84	38.1
SHS3660CC	Hardwood, 1¾", square edge	1 ¾	44	60	1524	36	914	105	47.6
SHS3672CC	Hardwood, 1¾", square edge	1 ¾	44	72	1829	36	914	126	57.2
SHS3696CC	Hardwood, 1¾", square edge	1 ¾	44	96	2438	36	914	168	76.2
SHCS3048CC	Hardwood, Corner, 1¾", square edge	1 ¾	44	48	1219	30	762	104	47.2
SHCS3648CC	Hardwood, Corner, 1¾", square edge	1 ¾	44	48	1219	36	914	109	49.4

Rev 11/23/26

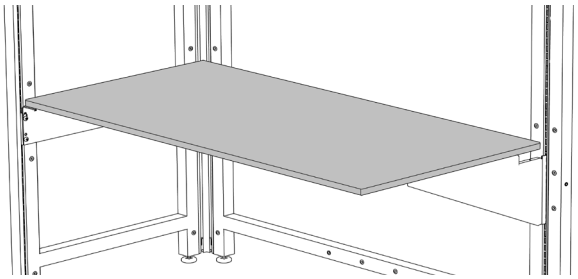

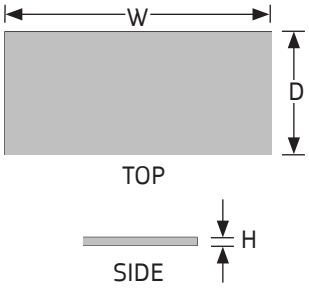

ULTRA SURFACES, STAINLESS STEEL

- Stainless Steel Surfaces are made for areas where high abrasion, chemical resistance and sterilization are required.
- Surfaces mount to ErgoStats®, Table Bases, WorkTables, and UltraFrames.
- Manufactured using 16 gauge stainless steel with a #4 brush finish.
- Surface is constructed of a stainless steel "cap" (tops and sides are formed from one sheet of steel with welded corners) assembled to a core which is laminated with backer material. The joint between the cap and core is sealed around the full perimeter.
- Load capacity is 500 lbs. evenly distributed.

NOTES

» Surface supports sold separately; see pages 4.24 - 4.26.

» 72" and 96" wide frame-mounted surfaces must be supported in the center by Surface Cantilever Supports. Specify one 18" cantilever per 24" and 30" deep surface and one 24" cantilever per 36" deep surface.

How to Specify

Step 1. Product Number

USC Ultra Surface, Stainless Steel

Step 2. Depth

24 24" deep **30** 30" deep **36** 36" deep

Step 3. Width

36 36" wide **48** 48" wide **60** 60" wide
72 72" wide **96** 96" wide

Product Number	Description	Height		Width		Depth		Weight	
		in.	[mm]	in.	[mm]	in.	[mm]	lb.	[kg]
USC2436	Stainless steel, square edge	1 ⅛	28	36	914	24	610	44	20.0
USC2448	Stainless steel, square edge	1 ⅛	29	48	1219	24	610	59	26.8
USC2460	Stainless steel, square edge	1 ⅛	29	60	1524	24	610	73	33.1
USC2472	Stainless steel, square edge	1 ⅛	29	72	1829	24	610	88	39.9
USC2496	Stainless steel, square edge	1 ⅛	29	96	2438	24	610	117	53.1
USC3036	Stainless steel, square edge	1 ⅛	29	36	914	30	762	55	24.9
USC3048	Stainless steel, square edge	1 ⅛	29	48	1219	30	762	74	33.6
USC3060	Stainless steel, square edge	1 ⅛	29	60	1524	30	762	92	41.7
USC3072	Stainless steel, square edge	1 ⅛	29	72	1829	30	762	110	49.9
USC3096	Stainless steel, square edge	1 ⅛	29	96	2438	30	762	147	66.7
USC3636	Stainless steel, square edge	1 ⅛	29	36	914	36	914	66	29.9
USC3648	Stainless steel, square edge	1 ⅛	29	48	1219	36	914	88	39.9
USC3660	Stainless steel, square edge	1 ⅛	29	60	1524	36	914	110	49.9
USC3672	Stainless steel, square edge	1 ⅛	29	72	1829	36	914	132	59.9
USC3696	Stainless steel, square edge	1 ⅛	29	96	2438	36	914	176	79.8

Rev 11/23/26

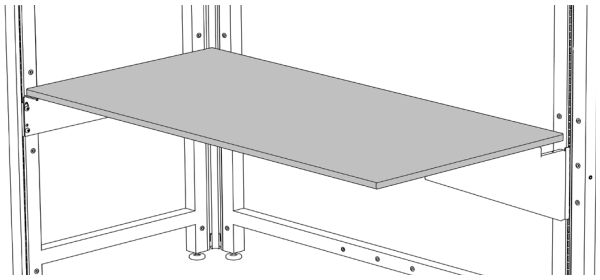

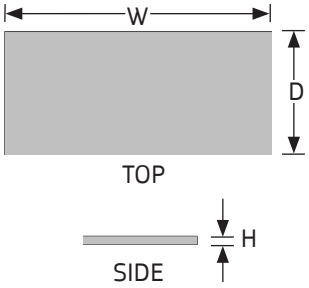

PHENOLIC SYSTEMS SURFACES

- 1" tall solid Phenolic Resin Surfaces are made for highly corrosive environments with exceptional chemical and wear resistance. Contact factory for detailed chemical resistance test data.
- Surfaces mount to ErgoStats®, Table Bases, WorkTables and UltraFrames.
- Surfaces have smooth ⅛" radius corners and are predrilled for end surface supports.
- Load capacity 300 lbs. evenly distributed.
- Finish is Black.

NOTES

» Surface supports sold separately; see pages 4.24 - 4.26.

» 72" and 96" wide frame-mounted surfaces must be supported in the center by Surface Cantilever Supports. Specify one 18" cantilever per 24" and 30" deep surface and one 24" cantilever per 36" deep surface.

» Phenolic (undrilled) Lab Surfaces available; see Section 10.

How to Specify

Step 1. Product Number

TSP Phenolic Resin Surface

Step 2. Depth

24 24" deep **30** 30" deep **36** 36" deep

Step 3. Width

24 24" wide **30** 30" wide **36** 36" wide
48 48" wide **60** 60" wide **72** 72" wide
96 96" wide

Step 4. Color Code

BK Black

Product Number	Description	Height		Width		Depth		Weight	
		in.	[mm]	in.	[mm]	in.	[mm]	lb.	[kg]
TSP2424BK	Phenolic, ⅛" radius edge	1	25	24	610	24	610	29	13.2
TSP2430BK	Phenolic, ⅛" radius edge	1	25	30	762	24	610	36	16.3
TSP2436BK	Phenolic, ⅛" radius edge	1	25	36	914	24	610	43	19.5
TSP2448BK	Phenolic, ⅛" radius edge	1	25	48	1219	24	610	58	26.3
TSP2460BK	Phenolic, ⅛" radius edge	1	25	60	1524	24	610	72	32.7
TSP2472BK	Phenolic, ⅛" radius edge	1	25	72	1829	24	610	86	39.0
TSP2496BK	Phenolic, ⅛" radius edge	1	25	96	2438	24	610	115	52.2
TSP3024BK	Phenolic, ⅛" radius edge	1	25	24	610	30	762	36	16.3
TSP3030BK	Phenolic, ⅛" radius edge	1	25	30	762	30	762	45	20.4
TSP3036BK	Phenolic, ⅛" radius edge	1	25	36	914	30	762	54	24.5
TSP3048BK	Phenolic, ⅛" radius edge	1	25	48	1219	30	762	72	32.7
TSP3060BK	Phenolic, ⅛" radius edge	1	25	60	1524	30	762	90	40.8
TSP3072BK	Phenolic, ⅛" radius edge	1	25	72	1829	30	762	108	49.0
TSP3096BK	Phenolic, ⅛" radius edge	1	25	96	2438	30	762	144	65.3
TSP3624BK	Phenolic, ⅛" radius edge	1	25	24	610	30	762	43	19.5
TSP3630BK	Phenolic, ⅛" radius edge	1	25	30	762	36	914	54	24.5
TSP3636BK	Phenolic, ⅛" radius edge	1	25	36	914	36	914	65	29.5
TSP3648BK	Phenolic, ⅛" radius edge	1	25	48	1219	36	914	86	39.0
TSP3660BK	Phenolic, ⅛" radius edge	1	25	60	1524	36	914	108	49.0
TSP3672BK	Phenolic, ⅛" radius edge	1	25	72	1829	36	914	130	59.0
TSP3696BK	Phenolic, ⅛" radius edge	1	25	96	2438	36	914	173	78.5

Rev 11/23/26

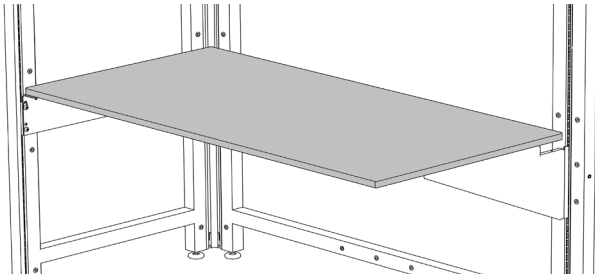

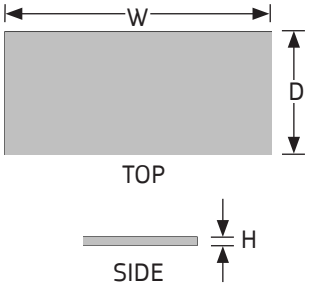

CORIAN SYSTEMS SURFACES

- 1.25" high Corian work surfaces have a .75" thick particle board core with a white malamine backer and .50" thick Corian.
- Corian work surfaces are used in areas where high chemical resistance and wear resistance are required.
- Surfaces mount to ErgoStats®, Table Bases, WorkTables, Tetrad Tables and UltraFrames.
- Surfaces have a square edge and are pre-drilled for end surface supports.
- Load capacity 300 lbs. evenly distributed.

NOTES

» For corner surfaces order left- and right-side supports separately; see pages 4.24 - 4.26.

» Surface supports sold separately; see pages 4.24 - 4.26.

» 72" and 96" wide frame-mounted surfaces must be supported in the center by Surface Cantilever Supports. Specify one 18" cantilever per 24" and 30" deep surface and one 24" cantilever per 36" deep surface.

How to Specify

Step 1. Product Number

TSKR Rectangular

Step 2. Depth

24 24" deep **30** 30" deep **36** 36" deep

Step 3. Width

24 24" wide **30** 30" wide **36** 36" wide
48 48" wide **60** 60" wide **72** 72" wide
96 96" wide

Step 4. Corian Color Code

SAE Artista Beige GRD 2 **SDN** Deep Nocturne GRD 3
SAG Artista Gray GRD 2 **SGX** Gray Onyx GRD 4
SBQ Bisque GRD 1 **SMW** Modern White GRD 2

Product Number	Description	Height		Width		Depth		Weight	
		in.	[mm]	in.	[mm]	in.	[mm]	lb.	[kg]
TSKR2424	Corian, square edge	1 ¼	32	24	610	24	610	27	12.4
TSKR2430	Corian, square edge	1 ¼	32	30	762	24	610	34	15.5
TSKR2436	Corian, square edge	1 ¼	32	36	914	24	610	41	18.6
TSKR2448	Corian, square edge	1 ¼	32	48	1219	24	610	55	24.8
TSKR2460	Corian, square edge	1 ¼	32	60	1524	24	610	68	31.0
TSKR2472	Corian, square edge	1 ¼	32	72	1829	24	610	82	37.2
TSKR2496	Corian, square edge	1 ¼	32	96	2438	24	610	109	49.6
TSKR3024	Corian, square edge	1 ¼	32	24	610	30	762	34	15.5
TSKR3030	Corian, square edge	1 ¼	32	30	762	30	762	43	19.4
TSKR3036	Corian, square edge	1 ¼	32	36	914	30	762	51	23.2
TSKR3048	Corian, square edge	1 ¼	32	48	1219	30	762	68	31.0
TSKR3060	Corian, square edge	1 ¼	32	60	1524	30	762	86	38.7
TSKR3072	Corian, square edge	1 ¼	32	72	1829	30	762	103	46.5
TSKR3096	Corian, square edge	1 ¼	32	96	2438	30	762	137	61.9
TSKR3624	Corian, square edge	1 ¼	32	24	610	36	914	41	18.6
TSKR3630	Corian, square edge	1 ¼	32	30	762	36	914	51	23.2
TSKR3636	Corian, square edge	1 ¼	32	36	914	36	914	62	27.9
TSKR3648	Corian, square edge	1 ¼	32	48	1219	36	914	82	37.2
TSKR3660	Corian, square edge	1 ¼	32	60	1524	36	914	103	46.5
TSKR3672	Corian, square edge	1 ¼	32	72	1829	36	914	123	55.8
TSKR3696	Corian, square edge	1 ¼	32	96	2438	36	914	164	74.3

Rev 03/12/26

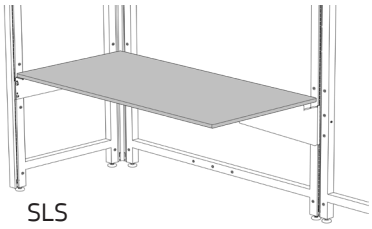

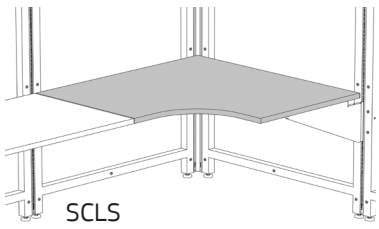

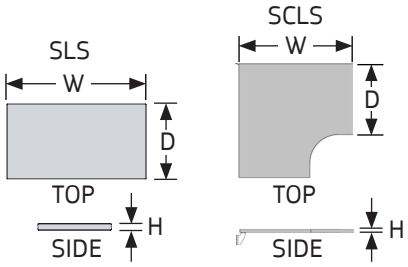

STD. SURFACES, STD. LAMINATE, SQUARE EDGE

- 1¼" tall high pressure laminate rectangular and corner surfaces mount to ErgoStats®, Table Bases and UltraFrames.
- Surfaces have square corners with matching square edge band.
- Surfaces are predrilled for supports and most accessories.
- Corner surfaces include one corner bracket.
- Load capacity 300 lbs. evenly distributed.

NOTES

» For corner surfaces order left- and right-side supports separately; see pages 4.24 - 4.26.

» Surface supports sold separately; see pages 4.24 - 4.26.

» 72" and 96" wide frame-mounted surfaces must be supported in the center by Surface Cantilever Supports. Specify one 18" cantilever per 24" and 30" deep surface and one 24" cantilever per 36" deep surface.

How to Specify

Step 1. Product Number

SLS Rectangular Surface, Square Edge
SCLS Corner Surface, Square Edge

Step 2. Depth

24 24" deep **30** 30" deep **36** 36" deep

Step 3. Width (Corner is 48" only)

24 24" wide **30** 30" wide **36** 36" wide
48 48" wide **60** 60" wide **72** 72" wide
96 96" wide

Step 4. Laminate Color Code

AW Arctic White **NW** Neutral White
BK Black **SA** Sand
GF Grey Fleck **WF** White Fleck
GL Grey Light

Product Number	Description	Height		Width		Depth		Weight	
		in.	[mm]	in.	[mm]	in.	[mm]	lb.	[kg]
SLS2424	Standard laminate, square edge	1 ¼	32	24	610	24	610	22	10.0
SLS2430	Standard laminate, square edge	1 ¼	32	30	762	24	610	24	10.9
SLS2436	Standard laminate, square edge	1 ¼	32	36	914	24	610	29	13.2
SLS2448	Standard laminate, square edge	1 ¼	32	48	1219	24	610	36	16.3
SLS2460	Standard laminate, square edge	1 ¼	32	60	1524	24	610	45	20.4
SLS2472	Standard laminate, square edge	1 ¼	32	72	1829	24	610	54	24.5
SLS2496	Standard laminate, square edge	1 ¼	32	96	2438	24	610	72	32.7
SLS3024	Standard laminate, square edge	1 ¼	32	24	610	30	762	24	10.9
SLS3030	Standard laminate, square edge	1 ¼	32	30	762	30	762	30	13.6
SLS3036	Standard laminate, square edge	1 ¼	32	36	914	30	762	36	16.3
SLS3048	Standard laminate, square edge	1 ¼	32	48	1219	30	762	45	20.4
SLS3060	Standard laminate, square edge	1 ¼	32	60	1524	30	762	56	25.4
SLS3072	Standard laminate, square edge	1 ¼	32	72	1829	30	762	67	30.4
SLS3096	Standard laminate, square edge	1 ¼	32	96	2438	30	762	90	40.8
SLS3624	Standard laminate, square edge	1 ¼	32	24	610	36	762	26	11.8
SLS3630	Standard laminate, square edge	1 ¼	32	30	762	36	914	36	16.3
SLS3636	Standard laminate, square edge	1 ¼	32	36	914	36	914	43	19.5
SLS3648	Standard laminate, square edge	1 ¼	32	48	1219	36	914	54	24.5
SLS3660	Standard laminate, square edge	1 ¼	32	60	1524	36	914	67	30.4
SLS3672	Standard laminate, square edge	1 ¼	32	72	1829	36	914	80	36.3
SLS3696	Standard laminate, square edge	1 ¼	32	96	2438	36	914	108	49.0
SCLS2448	Standard laminate, corner, square edge	1 ¼	32	48	1219	24	610	72	32.7
SCLS3048	Standard laminate, corner, square edge	1 ¼	32	48	1219	30	762	74	33.6
SCLS3648	Standard laminate, corner, square edge	1 ¼	32	48	1219	36	914	78	35.4

Rev 11/23/26

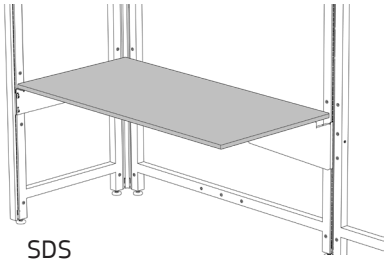
SDS

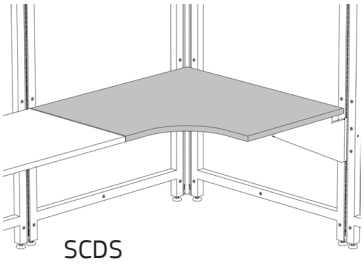
SCDS

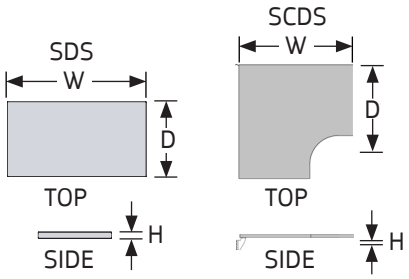

STD. SURFACES, ESD LAMINATE, SQUARE EDGE

- 1¼" tall high pressure ESD laminate surfaces mount to ErgoStats®, Table Bases and UltraFrames.
- Symbiote dissipative surfaces are manufactured with Nevamar® Static Dissipative Laminates (SDL). Nevamar SDL is manufactured to have a point to point and point to ground resistance of 1 x 106 to 1 x 109 ohms @ 10-60% relative humidity. Nevamar SDL conforms to ESD Association Standard ESD-S4.1.
- Dissipative Surfaces include a Laminate Grounding Terminal Kit.
- Surfaces have square corners with matching square edge-band.
- Corner surfaces include one corner bracket.
- Surfaces are predrilled for supports and most accessories.
- Load capacity 300 lbs. evenly distributed.

NOTES

» Corner surfaces ship with one corner bracket. Order left- and right-side supports separately; see pages 4.24 - 4.26.

» Surface supports sold separately; see pages 4.24 - 4.26.

» 72" and 96" wide frame-mounted surfaces must be supported in the center by Surface Cantilever Supports. Specify one 18" cantilever per 24" and 30" deep surface and one 24" cantilever per 36" deep surface.

» Customers are responsible for specifying ESD surface requirements; corporate ESD standards must be consulted prior to ordering.

How to Specify

Step 1. Product Number

SDS Rectangular Surface, Square Edge
SCDS Corner Surface, Square Edge

Step 2. Depth

24 24" deep **30** 30" deep **36** 36" deep

Step 3. Width (Corner is 48" only)

24 24" wide **30** 30" wide **36** 36" wide
48 48" wide **60** 60" wide **72** 72" wide
96 96" wide

Step 4. Laminate Color Code

DBK Dissipative Black
DG Dissipative Grey
DNW Dissipative Neutral White
DW Dissipative White

Product Number	Description	Height		Width		Depth		Weight	
		in.	[mm]	in.	[mm]	in.	[mm]	lb.	[kg]
SDS2424	ESD laminate, square edge	1 ¼	32	24	610	24	610	22	10.0
SDS2430	ESD laminate, square edge	1 ¼	32	30	762	24	610	24	10.9
SDS2436	ESD laminate, square edge	1 ¼	32	36	914	24	610	29	13.2
SDS2448	ESD laminate, square edge	1 ¼	32	48	1219	24	610	36	16.3
SDS2460	ESD laminate, square edge	1 ¼	32	60	1524	24	610	45	20.4
SDS2472	ESD laminate, square edge	1 ¼	32	72	1829	24	610	54	24.5
SDS2496	ESD laminate, square edge	1 ¼	32	96	2438	24	610	72	32.7
SDS3024	ESD laminate, square edge	1 ¼	32	24	610	30	762	24	10.9
SDS3030	ESD laminate, square edge	1 ¼	32	30	762	30	762	30	13.6
SDS3036	ESD laminate, square edge	1 ¼	32	36	914	30	762	36	16.3

Cont'd

STD. SURFACES, ESD LAMINATE, SQUARE EDGE *(Cont'd)*

Product Number	Description	Height		Width		Depth		Weight	
		in.	[mm]	in.	[mm]	in.	[mm]	lb.	[kg]
SDS3048	ESD laminate, square edge	1 ¼	32	48	1219	30	762	45	20.4
SDS3060	ESD laminate, square edge	1 ¼	32	60	1524	30	762	56	25.4
SDS3072	ESD laminate, square edge	1 ¼	32	72	1829	30	762	67	30.4
SDS3096	ESD laminate, square edge	1 ¼	32	96	2438	30	762	90	40.8
SDS3624	ESD laminate, square edge	1 ¼	32	24	610	36	762	26	11.8
SDS3630	ESD laminate, square edge	1 ¼	32	30	762	36	914	36	16.3
SDS3636	ESD laminate, square edge	1 ¼	32	36	914	36	914	43	19.5
SDS3648	ESD laminate, square edge	1 ¼	32	48	1219	36	914	54	24.5
SDS3660	ESD laminate, square edge	1 ¼	32	60	1524	36	914	67	30.4
SDS3672	ESD laminate, square edge	1 ¼	32	72	1829	36	914	80	36.3
SDS3696	ESD laminate, square edge	1 ¼	32	96	2438	36	914	108	49.0
SCDS2448	ESD laminate, corner, square edge	1 ¼	32	48	1219	24	610	72	32.7
SCDS3048	ESD laminate, corner, square edge	1 ¼	32	48	1219	30	762	74	33.6
SCDS3648	ESD laminate, corner, square edge	1 ¼	32	48	1219	36	914	78	35.4

Rev 11/23/26

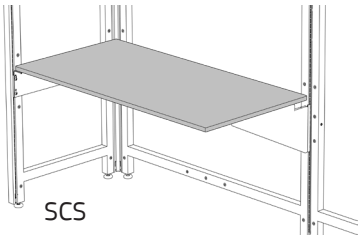

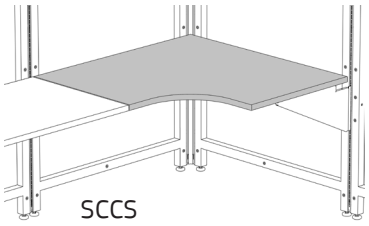

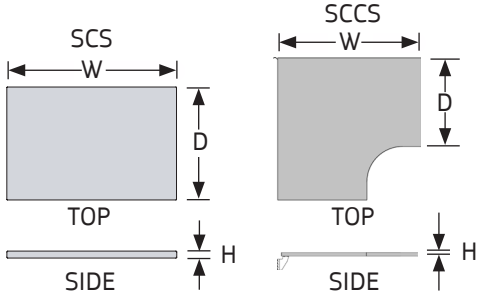

STD. SURFACES, CHEMSURF LAM., SQUARE EDGE

- 1¼" tall high pressure Chemsurf laminate surfaces are made for highly corrosive environments with exceptional chemical and wear resistance.
- Surfaces mount to ErgoStats®, Table Bases and UltraFrames.
- Surfaces have square corners with a matching square edge-band.
- Surfaces are predrilled for supports and most accessories.
- Corner surfaces include one corner bracket.
- Load capacity 300 lbs. evenly distributed.

NOTES

» Corner surfaces ship with one corner bracket. Order left- and right-side supports separately; see pages 4.24 - 4.26.

» Surface supports sold separately; see pages 4.24 - 4.26.

» 72" and 96" wide frame-mounted surfaces must be supported in the center by Surface Cantilever Supports. Specify one 18" cantilever per 24" and 30" deep surface and one 24" cantilever per 36" deep surface.

How to Specify

Step 1. Product Number

SCS Rectangular Surface, Square Edge
SCCS Corner Surface, Square Edge

Step 2. Depth

24 24" deep **30** 30" deep **36** 36" deep

Step 3. Width (Corner is 48" only)

24 24" wide **30** 30" wide **36** 36" wide
48 48" wide **60** 60" wide **72** 72" wide
96 96" wide

Step 4. Chemsurf Laminate Color Code

CBK Black
CGL Grey Light
CNW Neutral White

Product Number	Description	Height		Width		Depth		Weight	
		in.	[mm]	in.	[mm]	in.	[mm]	lb.	[kg]
SCS2424	Chemsurf laminate, square edge	1 ¼	32	24	610	24	610	22	10.0
SCS2430	Chemsurf laminate, square edge	1 ¼	32	30	762	24	610	24	10.9
SCS2436	Chemsurf laminate, square edge	1 ¼	32	36	914	24	610	29	13.2
SCS2448	Chemsurf laminate, square edge	1 ¼	32	48	1219	24	610	36	16.3
SCS2460	Chemsurf laminate, square edge	1 ¼	32	60	1524	24	610	45	20.4
SCS2472	Chemsurf laminate, square edge	1 ¼	32	72	1829	24	610	54	24.5
SCS2496	Chemsurf laminate, square edge	1 ¼	32	96	2438	24	610	72	32.7
SCS3024	Chemsurf laminate, square edge	1 ¼	32	24	610	30	762	24	10.9
SCS3030	Chemsurf laminate, square edge	1 ¼	32	30	762	30	762	30	13.6
SCS3036	Chemsurf laminate, square edge	1 ¼	32	36	914	30	762	36	16.3
SCS3048	Chemsurf laminate, square edge	1 ¼	32	48	1219	30	762	45	20.4
SCS3060	Chemsurf laminate, square edge	1 ¼	32	60	1524	30	762	56	25.4
SCS3072	Chemsurf laminate, square edge	1 ¼	32	72	1829	30	762	67	30.4
SCS3096	Chemsurf laminate, square edge	1 ¼	32	96	2438	30	762	90	40.8
SCS3624	Chemsurf laminate, square edge	1 ¼	32	24	610	36	762	26	11.8
SCS3630	Chemsurf laminate, square edge	1 ¼	32	30	762	36	914	36	16.3
SCS3636	Chemsurf laminate, square edge	1 ¼	32	36	914	36	914	43	19.5
SCS3648	Chemsurf laminate, square edge	1 ¼	32	48	1219	36	914	54	24.5
SCS3660	Chemsurf laminate, square edge	1 ¼	32	60	1524	36	914	67	30.4
SCS3672	Chemsurf laminate, square edge	1 ¼	32	72	1829	36	914	80	36.3
SCS3696	Chemsurf laminate, square edge	1 ¼	32	96	2438	36	914	108	49.0
SCCS2448	Chemsurf laminate, corner, square edge	1 ¼	32	48	1219	24	610	72	32.7
SCCS3048	Chemsurf laminate, corner, square edge	1 ¼	32	48	1219	30	762	74	33.6
SCCS3648	Chemsurf laminate, corner, square edge	1 ¼	32	48	1219	36	914	78	35.4

Rev 11/23/26

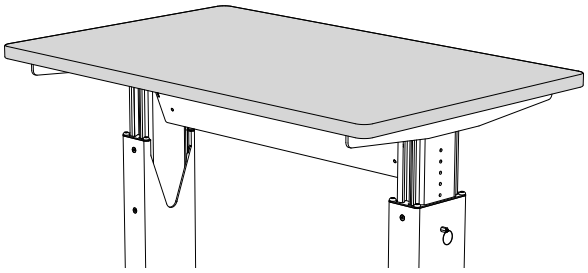

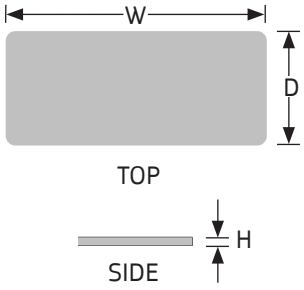

WORK SURFACES, STANDARD LAMINATE, T-EDGE

- 1¼" tall high pressure laminate surfaces mount to WorkTable Bases or 4-Legged Tables to construct a height adjustable table.
- Surfaces have matching vinyl T-edge around the full perimeter (with 1" radius corners).
- 30" deep Work Surfaces do not accept surface mounted accessories deeper than 12".
- 36" deep Work Surfaces do not accept surface mounted accessories deeper than 15".
- 42" deep Work Surfaces do not accept surface mounted accessories deeper than 18".
- 48" deep Work Surfaces do not accept surface mounted accessories deeper than 21".
- Load capacity 500 lbs. evenly distributed.

How to Specify

Step 1. Product Number

WLT Work Surface, Std. Laminate, T-Edge

Step 2. Depth

30 30" deep **36** 36" deep **42** 42" deep
48 48" deep

Step 3. Width

48 48" wide **60** 60" wide **72** 72" wide
96 96" wide

Step 4. Laminate Color Code

AW Arctic White
BK Black
GF Grey Fleck
GL Grey Light
NW Neutral White
SA Sand
WF White Fleck

Product Number	Description	Height		Width		Depth		Weight	
		in.	[mm]	in.	[mm]	in.	[mm]	lb.	[kg]
WLT3048	Standard laminate, t-edge	1 ¼	32	48	1219	30	762	45	20.4
WLT3060	Standard laminate, t-edge	1 ¼	32	60	1524	30	762	56	25.4
WLT3072	Standard laminate, t-edge	1 ¼	32	72	1829	30	762	67	30.4
WLT3096	Standard laminate, t-edge	1 ¼	32	96	2438	30	762	90	40.8
WLT3648	Standard laminate, t-edge	1 ¼	32	48	1219	36	914	54	24.5
WLT3660	Standard laminate, t-edge	1 ¼	32	60	1524	36	914	67	30.4
WLT3672	Standard laminate, t-edge	1 ¼	32	72	1829	36	914	80	36.3
WLT3696	Standard laminate, t-edge	1 ¼	32	96	2438	36	914	108	49.0
WLT4248	Standard laminate, t-edge	1 ¼	32	48	1219	42	1067	63	28.6
WLT4260	Standard laminate, t-edge	1 ¼	32	60	1524	42	1067	78	35.4
WLT4272	Standard laminate, t-edge	1 ¼	32	72	1829	42	1067	93	42.2
WLT4296	Standard laminate, t-edge	1 ¼	32	96	2438	42	1067	126	57.2
WLT4848	Standard laminate, t-edge	1 ¼	32	48	1219	48	1219	72	32.7
WLT4860	Standard laminate, t-edge	1 ¼	32	60	1524	48	1219	89	40.4
WLT4872	Standard laminate, t-edge	1 ¼	32	72	1829	48	1219	107	48.5
WLT4896	Standard laminate, t-edge	1 ¼	32	96	2438	48	1219	144	65.3

Rev 06/20/24

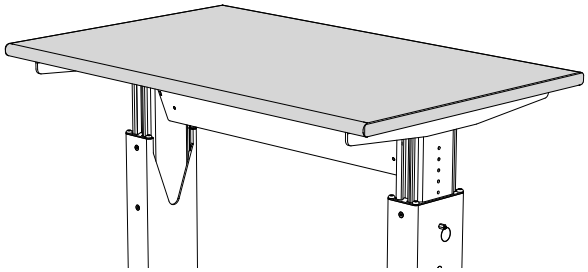

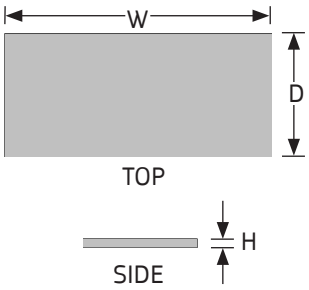

WORK SURFACES, STD. LAMINATE, SQUARE EDGE

- 1¼" tall high pressure laminate surfaces mount to WorkTable Bases or 4-Legged Tables to construct a height adjustable table.
- Matching vinyl square edge-banding.
- 30" deep Work Surfaces do not accept surface mounted accessories deeper than 12".
- 36" deep Work Surfaces do not accept surface mounted accessories deeper than 15".
- 42" deep Work Surfaces do not accept surface mounted accessories deeper than 18".
- 48" deep Work Surfaces do not accept surface mounted accessories deeper than 21".
- Load capacity 500 lbs. evenly distributed.

How to Specify

Step 1. Product Number

WLS Work Surface, Std. Laminate, SQ Edge

Step 2. Depth

30 30" deep **36** 36" deep **42** 42" deep
48 48" deep

Step 3. Width

48 48" wide **60** 60" wide **72** 72" wide
96 96" wide

Step 4. Laminate Color Code

AW Arctic White
BK Black
GF Grey Fleck
GL Grey Light
NW Neutral White
SA Sand
WF White Fleck

Product Number	Description	Height		Width		Depth		Weight	
		in.	[mm]	in.	[mm]	in.	[mm]	lb.	[kg]
WLS3048	Standard laminate, square edge	1 ¼	32	48	1219	30	762	45	20.4
WLS3060	Standard laminate, square edge	1 ¼	32	60	1524	30	762	56	25.4
WLS3072	Standard laminate, square edge	1 ¼	32	72	1829	30	762	67	30.4
WLS3096	Standard laminate, square edge	1 ¼	32	96	2438	30	762	90	40.8
WLS3648	Standard laminate, square edge	1 ¼	32	48	1219	36	914	54	24.5
WLS3660	Standard laminate, square edge	1 ¼	32	60	1524	36	914	67	30.4
WLS3672	Standard laminate, square edge	1 ¼	32	72	1829	36	914	80	36.3
WLS3696	Standard laminate, square edge	1 ¼	32	96	2438	36	914	108	49.0
WLS4248	Standard laminate, square edge	1 ¼	32	48	1219	42	1067	63	28.6
WLS4260	Standard laminate, square edge	1 ¼	32	60	1524	42	1067	78	35.4
WLS4272	Standard laminate, square edge	1 ¼	32	72	1829	42	1067	93	42.2
WLS4296	Standard laminate, square edge	1 ¼	32	96	2438	42	1067	126	57.2
WLS4848	Standard laminate, square edge	1 ¼	32	48	1219	48	1219	72	32.7
WLS4860	Standard laminate, square edge	1 ¼	32	60	1524	48	1219	89	40.4
WLS4872	Standard laminate, square edge	1 ¼	32	72	1829	48	1219	107	48.5
WLS4896	Standard laminate, square edge	1 ¼	32	96	2438	48	1219	144	65.3

Rev 10/20/25

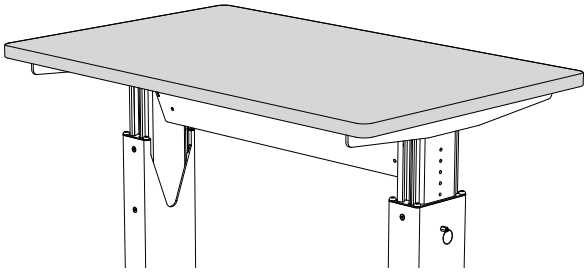

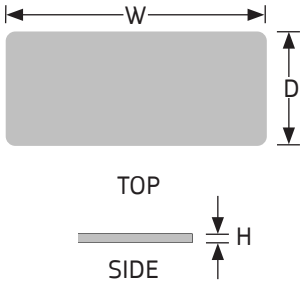

WORK SURFACES, ESD LAMINATE, T-EDGE

- 1¼" tall high pressure laminate surfaces mount to WorkTable Bases or 4-Legged Tables to construct a height adjustable table.
- Each surface includes a Laminate Grounding Terminal Kit (72" and 96" surfaces have two).
- Nevamar® Static Dissipative Laminates (SDL) conform to ESD Association Standard ESD-S4. SDL has a point to point and point to ground resistance of 1x106 to 1x109 ohms @10-60% relative humidity.
- Surfaces have a matching vinyl T-edge around the full perimeter (with 1" radius corners).
- 30" deep Work Surfaces do not accept surface mounted accessories deeper than 12".
- 36" deep Work Surfaces do not accept surface mounted accessories deeper than 15".
- 42" deep Work Surfaces do not accept surface mounted accessories deeper than 18".
- 48" deep Work Surfaces do not accept surface mounted accessories deeper than 21".
- Load capacity 500 lbs. evenly distributed.

How to Specify

Step 1. Product Number

WDT ESD Laminate, T-Edge

Step 2. Depth

30 30" deep **36** 36" deep **42** 42" deep
48 48" deep

Step 3. Width

48 48" wide **60** 60" wide **72** 72" wide
96 96" wide

Step 4. Laminate Color Code

DBK Dissipative Black
DG Dissipative Grey
DNW Dissipative Neutral White
DW Dissipative White

NOTES

» Customers are responsible for specifying ESD surface requirements; corporate ESD standards must be consulted prior to ordering.

Product Number	Description	Height		Width		Depth		Weight	
		in.	[mm]	in.	[mm]	in.	[mm]	lb.	[kg]
WDT3048	ESD laminate, t-edge	1 ¼	32	48	1219	30	762	45	20.4
WDT3060	ESD laminate, t-edge	1 ¼	32	60	1524	30	762	56	25.4
WDT3072	ESD laminate, t-edge	1 ¼	32	72	1829	30	762	67	30.4
WDT3096	ESD laminate, t-edge	1 ¼	32	96	2438	30	762	90	40.8
WDT3648	ESD laminate, t-edge	1 ¼	32	48	1219	36	914	54	24.5
WDT3660	ESD laminate, t-edge	1 ¼	32	60	1524	36	914	67	30.4
WDT3672	ESD laminate, t-edge	1 ¼	32	72	1829	36	914	80	36.3
WDT3696	ESD laminate, t-edge	1 ¼	32	96	2438	36	914	108	49.0
WDT4248	ESD laminate, t-edge	1 ¼	32	48	1219	42	1067	63	28.6
WDT4260	ESD laminate, t-edge	1 ¼	32	60	1524	42	1067	78	35.4
WDT4272	ESD laminate, t-edge	1 ¼	32	72	1829	42	1067	93	42.2
WDT4296	ESD laminate, t-edge	1 ¼	32	96	2438	42	1067	126	57.2
WDT4848	ESD laminate, t-edge	1 ¼	32	48	1219	48	1219	72	32.7
WDT4860	ESD laminate, t-edge	1 ¼	32	60	1524	48	1219	89	40.4
WDT4872	ESD laminate, t-edge	1 ¼	32	72	1829	48	1219	107	48.5
WDT4896	ESD laminate, t-edge	1 ¼	32	96	2438	48	1219	144	65.3

Rev 11/23/26

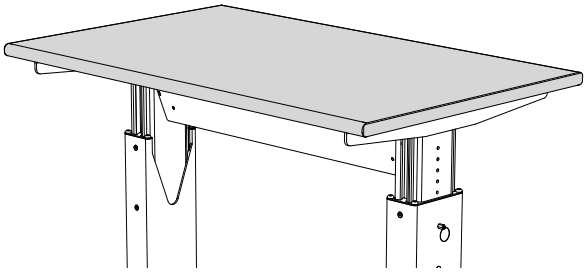

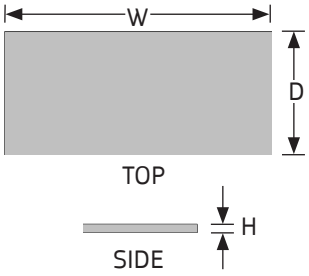

WORK SURFACES, ESD LAMINATE, SQUARE EDGE

- 1¼" tall high pressure laminate surfaces mount to WorkTable Bases or 4-Legged Tables to construct a height adjustable table.
- Each surface includes a Laminate Grounding Terminal Kit (72" and 96" surfaces have two).
- Nevamar® Static Dissipative Laminates (SDL) conform to ESD Association Standard ESD-S4. SDL has a point to point and point to ground resistance of 1x106 to 1x109 ohms @10-60% relative humidity.
- Surfaces have a matching vinyl square edge-banding.
- 30" deep Work Surfaces do not accept surface mounted accessories deeper than 12".
- 36" deep Work Surfaces do not accept surface mounted accessories deeper than 15".
- 42" deep Work Surfaces do not accept surface mounted accessories deeper than 18".
- 48" deep Work Surfaces do not accept surface mounted accessories deeper than 21".
- Load capacity 500 lbs. evenly distributed.

How to Specify

Step 1. Product Number

WDS ESD Laminate, Square Edge

Step 2. Depth

30 30" deep **36** 36" deep **42** 42" deep
48 48" deep

Step 3. Width

48 48" wide **60** 60" wide **72** 72" wide
96 96" wide

Step 4. Laminate Color Code

DBK Dissipative Black
DG Dissipative Grey
DNW Dissipative Neutral White
DW Dissipative White

NOTES

» Customers are responsible for specifying ESD surface requirements; corporate ESD standards must be consulted prior to ordering.

Product Number	Description	Height		Width		Depth		Weight	
		in.	[mm]	in.	[mm]	in.	[mm]	lb.	[kg]
WDS3048	ESD laminate, square edge	1 ¼	32	48	1219	30	762	45	20.4
WDS3060	ESD laminate, square edge	1 ¼	32	60	1524	30	762	56	25.4
WDS3072	ESD laminate, square edge	1 ¼	32	72	1829	30	762	67	30.4
WDS3096	ESD laminate, square edge	1 ¼	32	96	2438	30	762	90	40.8
WDS3648	ESD laminate, square edge	1 ¼	32	48	1219	36	914	54	24.5
WDS3660	ESD laminate, square edge	1 ¼	32	60	1524	36	914	67	30.4
WDS3672	ESD laminate, square edge	1 ¼	32	72	1829	36	914	80	36.3
WDS3696	ESD laminate, square edge	1 ¼	32	96	2438	36	914	108	49.0
WDS4248	ESD laminate, square edge	1 ¼	32	48	1219	42	1067	63	28.6
WDS4260	ESD laminate, square edge	1 ¼	32	60	1524	42	1067	78	35.4
WDS4272	ESD laminate, square edge	1 ¼	32	72	1829	42	1067	93	42.2
WDS4296	ESD laminate, square edge	1 ¼	32	96	2438	42	1067	126	57.2
WDS4848	ESD laminate, square edge	1 ¼	32	48	1219	48	1219	72	32.7
WDS4860	ESD laminate, square edge	1 ¼	32	60	1524	48	1219	89	40.4
WDS4872	ESD laminate, square edge	1 ¼	32	72	1829	48	1219	107	48.5
WDS4896	ESD laminate, square edge	1 ¼	32	96	2438	48	1219	144	65.3

Rev 11/23/26

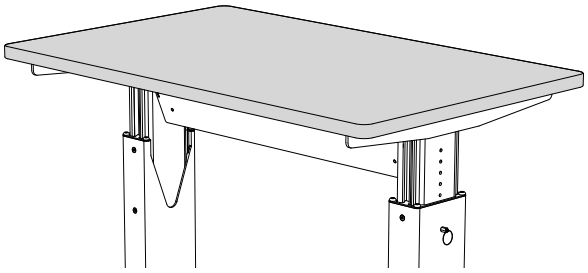

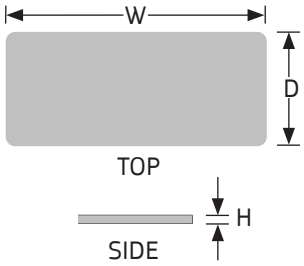

WORK SURFACES, CHEMSURF LAMINATE, T-EDGE

- 1¼" tall high pressure Chemsurf laminate surfaces are made for highly corrosive environments with exceptional chemical and wear resistance.
- Surfaces mount to WorkTable Bases or 4-Legged Tables to construct a height adjustable table.
- Surfaces have a matching vinyl T-edge around the full perimeter (with 1" radius corners).
- 30" deep Work Surfaces do not accept surface mounted accessories deeper than 12".
- 36" deep Work Surfaces do not accept surface mounted accessories deeper than 15".
- 42" deep Work Surfaces do not accept surface mounted accessories deeper than 18".
- 48" deep Work Surfaces do not accept surface mounted accessories deeper than 21".
- Load capacity 500 lbs. evenly distributed.

How to Specify

Step 1. Product Number

WCT Chemsurf Laminate, T-Edge

Step 2. Depth

30 30" deep **36** 36" deep **42** 42" deep
48 48" deep

Step 3. Width

24 24" wide **30** 30" wide **36** 36" wide
48 48" wide **60** 60" wide **72** 72" wide
96 96" wide

Step 4. Chemsurf Laminate Color Code

CBK Black
CGL Grey Light
CNW Neutral White

Product Number	Description	Height		Width		Depth		Weight	
		in.	[mm]	in.	[mm]	in.	[mm]	lb.	[kg]
WCT3048	Chemsurf laminate, t-edge	1 ¼	32	48	1219	30	762	45	20.4
WCT3060	Chemsurf laminate, t-edge	1 ¼	32	60	1524	30	762	56	25.4
WCT3072	Chemsurf laminate, t-edge	1 ¼	32	72	1829	30	762	67	30.4
WCT3096	Chemsurf laminate, t-edge	1 ¼	32	96	2438	30	762	90	40.8
WCT3648	Chemsurf laminate, t-edge	1 ¼	32	48	1219	36	914	54	24.5
WCT3660	Chemsurf laminate, t-edge	1 ¼	32	60	1524	36	914	67	30.4
WCT3672	Chemsurf laminate, t-edge	1 ¼	32	72	1829	36	914	80	36.3
WCT3696	Chemsurf laminate, t-edge	1 ¼	32	96	2438	36	914	108	49.0
WCT4248	Chemsurf laminate, t-edge	1 ¼	32	48	1219	42	1067	63	28.6
WCT4260	Chemsurf laminate, t-edge	1 ¼	32	60	1524	42	1067	78	35.4
WCT4272	Chemsurf laminate, t-edge	1 ¼	32	72	1829	42	1067	93	42.2
WCT4296	Chemsurf laminate, t-edge	1 ¼	32	96	2438	42	1067	126	57.2
WCT4848	Chemsurf laminate, t-edge	1 ¼	32	48	1219	48	1219	72	32.7
WCT4860	Chemsurf laminate, t-edge	1 ¼	32	60	1524	48	1219	89	40.4
WCT4872	Chemsurf laminate, t-edge	1 ¼	32	72	1829	48	1219	107	48.5
WCT4896	Chemsurf laminate, t-edge	1 ¼	32	96	2438	48	1219	144	65.3

Rev 09/27/17

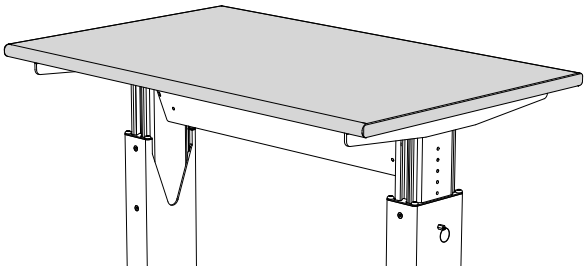

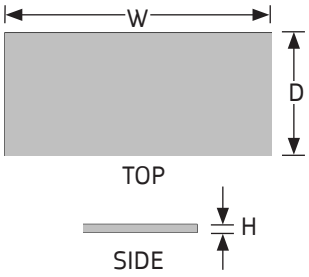

WORK SURFACES, CHEMSURF LAM., SQUARE EDGE

- 1¼" tall high pressure Chemsurf laminate surfaces are made for highly corrosive environments with exceptional chemical and wear resistance.
- Surfaces mount to WorkTable Bases or 4-Legged Tables to construct a height adjustable table.
- Surface have a matching square edge-banding.
- 30" deep Work Surfaces do not accept surface mounted accessories deeper than 12".
- 36" deep Work Surfaces do not accept surface mounted accessories deeper than 15".
- 42" deep Work Surfaces do not accept surface mounted accessories deeper than 18".
- 48" deep Work Surfaces do not accept surface mounted accessories deeper than 21".
- Load capacity 500 lbs. evenly distributed.

How to Specify

Step 1. Product Number

WCS Chemsurf Laminate, Square Edge

Step 2. Depth

30 30" deep **36** 36" deep **42** 42" deep
48 48" deep

Step 3. Width

24 24" wide **30** 30" wide **36** 36" wide
48 48" wide **60** 60" wide **72** 72" wide
96 96" wide

Step 4. Chemsurf Laminate Color Code

CBK Black
CGL Grey Light
CNW Neutral White

Product Number	Description	Height		Width		Depth		Weight	
		in.	[mm]	in.	[mm]	in.	[mm]	lb.	[kg]
WCS3048	Chemsurf laminate, square edge	1 ¼	32	48	1219	30	762	45	20.4
WCS3060	Chemsurf laminate, square edge	1 ¼	32	60	1524	30	762	56	25.4
WCS3072	Chemsurf laminate, square edge	1 ¼	32	72	1829	30	762	67	30.4
WCS3096	Chemsurf laminate, square edge	1 ¼	32	96	2438	30	762	90	40.8
WCS3648	Chemsurf laminate, square edge	1 ¼	32	48	1219	36	914	54	24.5
WCS3660	Chemsurf laminate, square edge	1 ¼	32	60	1524	36	914	67	30.4
WCS3672	Chemsurf laminate, square edge	1 ¼	32	72	1829	36	914	80	36.3
WCS3696	Chemsurf laminate, square edge	1 ¼	32	96	2438	36	914	108	49.0
WCS4248	Chemsurf laminate, square edge	1 ¼	32	48	1219	42	1067	63	28.6
WCS4260	Chemsurf laminate, square edge	1 ¼	32	60	1524	42	1067	78	35.4
WCS4272	Chemsurf laminate, square edge	1 ¼	32	72	1829	42	1067	93	42.2
WCS4296	Chemsurf laminate, square edge	1 ¼	32	96	2438	42	1067	126	57.2
WCS4848	Chemsurf laminate, square edge	1 ¼	32	48	1219	48	1219	72	32.7
WCS4860	Chemsurf laminate, square edge	1 ¼	32	60	1524	48	1219	89	40.4
WCS4872	Chemsurf laminate, square edge	1 ¼	32	72	1829	48	1219	107	48.5
WCS4896	Chemsurf laminate, square edge	1 ¼	32	96	2438	48	1219	144	65.3

Rev 10/20/25

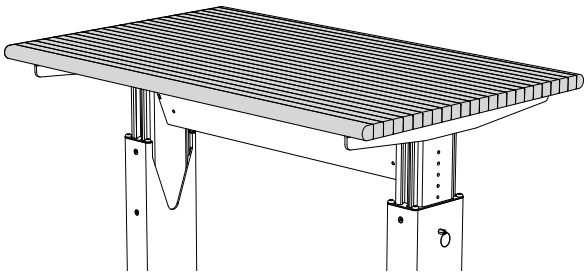

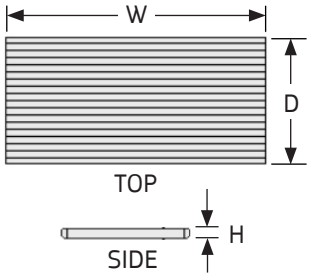

WORK SURFACES, HARDWOOD, 1¼" FULL-RADIUS EDGE

- 1¼" tall Hardwood Surfaces mount to WorkTable or 4-Legged Table Bases only.
- Surfaces consist of kiln-dried hardwood strips that are face glued, sanded smooth and finished with a two coat catalyzed varnish.
- Surfaces have a full-radius front and back edges with square side edges.
- 30" deep Work Surfaces do not accept surface mounted accessories deeper than 12".
- 36" deep Work Surfaces do not accept surface mounted accessories deeper than 15".
- 42" deep Work Surfaces do not accept surface mounted accessories deeper than 18".
- 48" deep Work Surfaces do not accept surface mounted accessories deeper than 21".
- Hardwood tops that are 42" and 48" deep are two pieces that are seamed together.
- Load capacity 500 lbs. evenly distributed.

How to Specify

Step 1. Product Number

WMR Work Surface, Hardwood, 1¼"

Step 2. Depth

30 30" deep **36** 36" deep **42** 42" deep
48 48" deep

Step 3. Width

48 48" wide **60** 60" wide **72** 72" wide
96 96" wide

Step 4. Color Code

CC Hardwood

Product Number	Description	Height		Width		Depth		Weight	
		in.	[mm]	in.	[mm]	in.	[mm]	lb.	[kg]
WMR3048CC	Hardwood, 1¼"	1 ¼	32	48	1219	30	762	50	22.7
WMR3060CC	Hardwood, 1¼"	1 ¼	32	60	1524	30	762	63	28.6
WMR3072CC	Hardwood, 1¼"	1 ¼	32	72	1829	30	762	75	34.0
WMR3096CC	Hardwood, 1¼"	1 ¼	32	96	2438	30	762	100	45.4
WMR3648CC	Hardwood, 1¼"	1 ¼	32	48	1219	36	914	60	27.2
WMR3660CC	Hardwood, 1¼"	1 ¼	32	60	1524	36	914	75	34.0
WMR3672CC	Hardwood, 1¼"	1 ¼	32	72	1829	36	914	90	40.8
WMR3696CC	Hardwood, 1¼"	1 ¼	32	96	2438	36	914	120	54.4
WMR4248CC	Hardwood, 1¼"	1 ¼	32	48	1219	42	1067	70	31.8
WMR4260CC	Hardwood, 1¼"	1 ¼	32	60	1524	42	1067	88	39.9
WMR4272CC	Hardwood, 1¼"	1 ¼	32	72	1829	42	1067	105	47.6
WMR4296CC	Hardwood, 1¼"	1 ¼	32	96	2438	42	1067	140	63.5
WMR4848CC	Hardwood, 1¼"	1 ¼	32	48	1219	48	1219	80	36.3
WMR4860CC	Hardwood, 1¼"	1 ¼	32	60	1524	48	1219	100	45.4
WMR4872CC	Hardwood, 1¼"	1 ¼	32	72	1829	48	1219	120	54.4
WMR4896CC	Hardwood, 1¼"	1 ¼	32	96	2438	48	1219	160	72.6

Rev 08/05/26

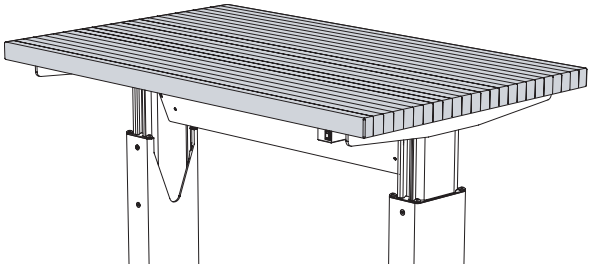

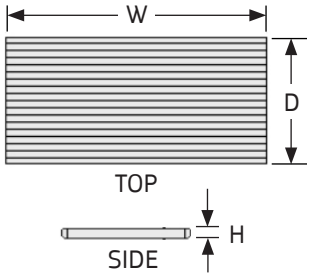

WORK SURFACES, HARDWOOD, 1¾" SQUARE EDGE

- 1¾" tall Hardwood Surfaces mount to WorkTable or 4-Legged Table Bases only.
- Surfaces consist of kiln-dried hardwood strips that are face glued, sanded smooth and finished with a two coat catalyzed varnish.
- Surfaces have a square-edged front, back and sides.
- 30" deep Work Surfaces do not accept surface mounted accessories deeper than 12".
- 36" deep Work Surfaces do not accept surface mounted accessories deeper than 15".
- 42" deep Work Surfaces do not accept surface mounted accessories deeper than 18".
- 48" deep Work Surfaces do not accept surface mounted accessories deeper than 21".
- Hardwood tops that are 42" and 48" deep are two pieces that are seamed together.
- Load capacity 500 lbs. evenly distributed.

How to Specify

Step 1. Product Number

WHS Work Surface, Hardwood, 1¾"

Step 2. Depth

30 30" deep **36** 36" deep **42** 42" deep
48 48" deep

Step 3. Width

48 48" wide **60** 60" wide **72** 72" wide
96 96" wide

Step 4. Color Code

CC Hardwood

Product Number	Description	Height		Width		Depth		Weight	
		in.	[mm]	in.	[mm]	in.	[mm]	lb.	[kg]
WHS3048CC	Hardwood, 1¾"	1 ¾	44	48	1219	30	762	70	31.8
WHS3060CC	Hardwood, 1¾"	1 ¾	44	60	1524	30	762	88	39.9
WHS3072CC	Hardwood, 1¾"	1 ¾	44	72	1829	30	762	105	47.6
WHS3096CC	Hardwood, 1¾"	1 ¾	44	96	2438	30	762	140	63.5
WHS3648CC	Hardwood, 1¾"	1 ¾	44	48	1219	36	914	84	38.1
WHS3660CC	Hardwood, 1¾"	1 ¾	44	60	1524	36	914	105	47.6
WHS3672CC	Hardwood, 1¾"	1 ¾	44	72	1829	36	914	126	57.2
WHS3696CC	Hardwood, 1¾"	1 ¾	44	96	2438	36	914	168	76.2
WHS4248CC	Hardwood, 1¾"	1 ¾	44	48	1219	42	1067	98	44.5
WHS4260CC	Hardwood, 1¾"	1 ¾	44	60	1524	42	1067	123	55.8
WHS4272CC	Hardwood, 1¾"	1 ¾	44	72	1829	42	1067	147	66.7
WHS4296CC	Hardwood, 1¾"	1 ¾	44	96	2438	42	1067	196	88.9
WHS4848CC	Hardwood, 1¾"	1 ¾	44	48	1219	48	1219	112	50.8
WHS4860CC	Hardwood, 1¾"	1 ¾	44	60	1524	48	1219	140	63.5
WHS4872CC	Hardwood, 1¾"	1 ¾	44	72	1829	48	1219	168	76.2
WHS4896CC	Hardwood, 1¾"	1 ¾	32	96	2438	48	1219	224	101.6

Rev 08/05/26

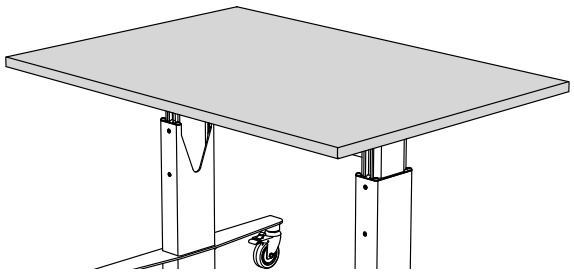

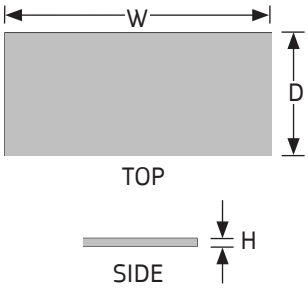

WORK SURFACES, STAINLESS STEEL

- Provides durable work surface for areas where high abrasion, chemical resistance and sterilization are required.
- Surfaces mount to WorkTable or 4-Legged Table Bases only.
- Surfaces are manufactured using 16 gauge stainless steel with a #4 brush finish.
- Surface is constructed of a stainless steel "cap" (tops and sides are formed from one sheet of steel with welded corners) assembled to a core which is laminated with backer material. The joint between the cap and core is sealed around the full perimeter.
- Load capacity is 500 lbs. evenly distributed.

How to Specify

Step 1. Product Number

WSC Work Surface, Stainless Steel

Step 2. Depth

42 42" deep **48** 48" deep

Step 3. Width

48 48" wide **60** 60" wide **72** 72" wide **96** 96" wide

Product Number	Description	Height		Width		Depth		Weight	
		in.	[mm]	in.	[mm]	in.	[mm]	lb.	[kg]
WSC4248	Stainless steel	1 ⅛	29	48	1219	42	1067	103	46.7
WSC4260	Stainless steel	1 ⅛	29	60	1524	42	1067	128	58.1
WSC4272	Stainless steel	1 ⅛	29	72	1829	42	1067	154	69.9
WSC4296	Stainless steel	1 ⅛	29	96	2438	42	1067	205	93.0
WSC4848	Stainless steel	1 ⅛	29	48	1219	48	1219	117	53.1
WSC4860	Stainless steel	1 ⅛	29	60	1524	48	1219	147	66.7
WSC4872	Stainless steel	1 ⅛	29	72	1829	48	1219	176	79.8
WSC4896	Stainless steel	1 ⅛	29	96	2438	48	1219	235	106.6

Rev 02/12/18

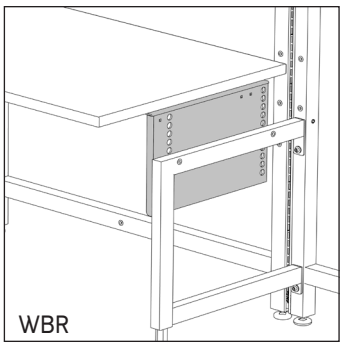

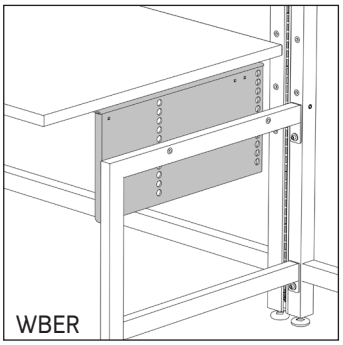

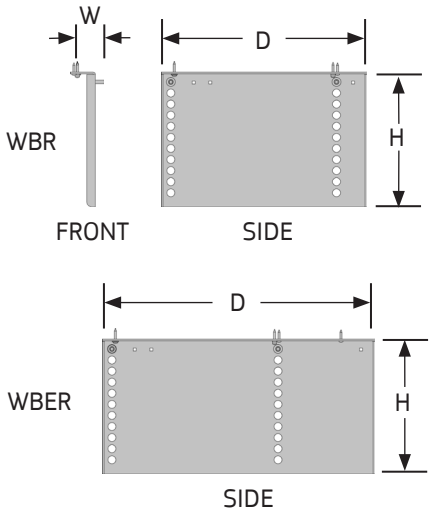

SURFACE B SUPPORT BRACKETS

- Brackets provide manual height adjustable support for Ultra or Work Surfaces mounted to Ultra Leg Supports.
- Brackets allow for surface heights to be adjusted in 1" increments. Height to the top of the support bracket ranges from 25⅞" to 35⅞" when used with Ultra Legs (UL25**) and from 30⅞" to 40⅞" when used with Ultra Legs (UL30**).
- Extended brackets are for use with 36" deep surfaces, while the 18⅝" deep brackets are for use with 24" and 30" deep surfaces.

NOTES

» 72" and 96" wide frame-mounted surfaces must be supported in the center by Surface Cantilever Supports. Specify one 18" cantilever per 24" and 30" deep surface and one 24" cantilever per 36" deep surface.

How to Specify

Step 1. Product Number

WBL10	B Support Bracket, left
WBR10	B Support Bracket, right
WBEL10	B Support Bracket, extended, left
WBER10	B Support Bracket, extended, right

Step 2. Paint Color Code

STANDARD

AW	Arctic White	**GL**	Grey Light Smooth
AS	Argent Silver	**GT**	Grey Light Texture
BK	Black	**NW**	Neutral White
BT	Black Texture	**ST**	Sand Texture

Product Number	Description	Height		Width		Depth		Weight	
		in.	[mm]	in.	[mm]	in.	[mm]	lb.	[kg]
WBL10	Bracket, left	12 ¼	311	2 ¼	57	18 ⅝	473	12	5.4
WBR10	Bracket, right	12 ¼	311	2 ¼	57	18 ⅝	473	12	5.4
WBEL10	Bracket, extended, left	12 ¼	311	2 ¼	57	24 ⅝	625	16	7.3
WBER10	Bracket, extended, right	12 ¼	311	2 ¼	57	24 ⅝	625	16	7.3

Rev 10/01/19

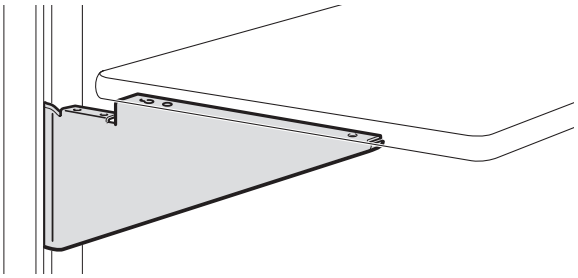

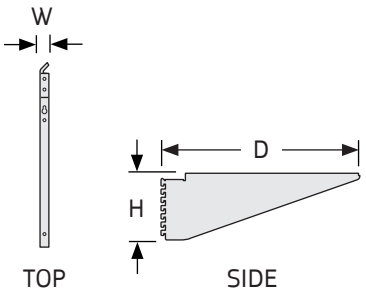

SURFACE CANTILEVER SUPPORTS

- Cantilevers provide manual height adjustable support for 24" and 30" deep Ultra or Work Surfaces mounted to UltraFrames.
- Cantilevers have a cut-out at the rear allowing for the pass through of cords and cables.

NOTES

» Use 24" supports with 24" and 30" deep surfaces; 36" deep surfaces require Extended Surface B Support Brackets; see page 4.31.

» 72" and 96" wide frame-mounted surfaces must be supported in the center by Surface Cantilever Supports. Specify one 18" cantilever per 24" and 30" deep surface and one 24" cantilever per 36" deep surface.

How to Specify

Step 1. Product Number

WSL Surface Cantilever Support, Left
WSR Surface Cantilever Support, Right

Step 3. Depth

18 18" deep **24** 24" deep

Step 3. Paint Color Code

STANDARD

AW Arctic White
AS Argent Silver
BK Black
BT Black Texture
GL Grey Light Smooth
GT Grey Light Texture
NW Neutral White
ST Sand Texture

Product Number	Description	Height		Width		Depth		Weight	
		in.	[mm]	in.	[mm]	in.	[mm]	lb.	[kg]
WSL18	Support, left	8 ½	216	1 ¼	32	18	457	4	1.8
WSR18	Support, right	8 ½	216	1 ¼	32	18	457	4	1.8
WSL24	Support, left	10 ½	267	1 ¼	32	23	584	5	2.3
WSR24	Support, right	10 ½	267	1 ¼	32	23	584	5	2.3

Rev 11/23/26

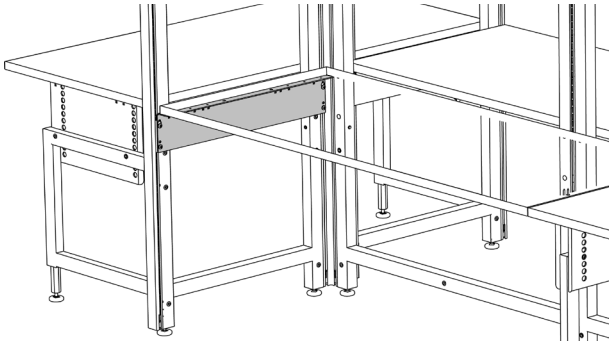

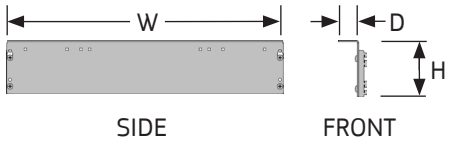

FRAME-MOUNT SURFACE SUPPORTS

- Supports mount to return UltraFrames providing rigid support for the left and right edges of Ultra or Standard Surfaces.
- Brackets are vertically adjustable in 1" increments.
- Frame-Mount Surface Supports are sold individually and are non-handed for surface depths of 30" and greater.
- Brackets have two hanger clip mounting positions to accommodate both standard and Lab Height Modules.

How to Specify

Step 1. Product Number

WSB Frame-Mount Support, Non-Handed
WSBL Frame-Mount Support, Left
WSBR Frame-Mount Support, Right

Step 2. Depth (Non-Handed only)

24 24" deep **30** 30" deep **36** 36" deep

Step 3. Depth (WSBL and WSBR only)

24 24" deep

Step 4. Paint Color Code

STANDARD

AW Arctic White
AS Argent Silver
BK Black
BT Black Texture
GL Grey Light Smooth
GT Grey Light Texture
NW Neutral White
ST Sand Texture

Product Number	Description	Height		Width		Depth		Weight	
		in.	[mm]	in.	[mm]	in.	[mm]	lb.	[kg]
WSB30	Non-handed	5 ¾	146	30	762	2	51	10	4.5
WSB36	Non-handed	5 ¾	146	36	914	2	51	12	5.4
WSBL24	Left	5 ¾	146	24	610	2	51	8	3.6
WSBR24	Right	5 ¾	146	24	610	2	51	8	3.6

Rev 11/23/26

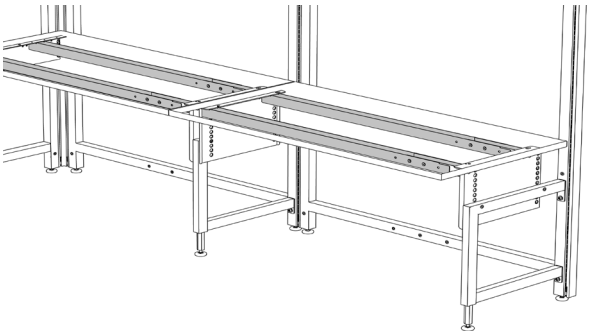

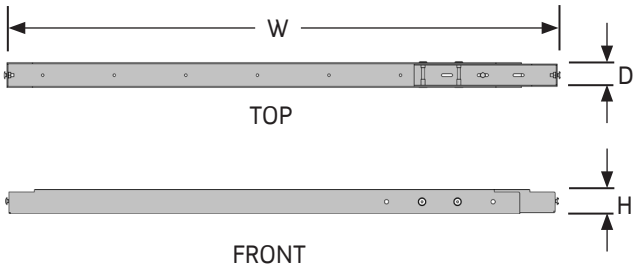

SURFACE REINFORCEMENT BARS

- Sold in pairs, Surface Reinforcement Bars provide horizontal support under surfaces for increased rigidity.
- Bars mount to Surface B Supports, Lab Height B Supports or Frame-Mount Surface Supports.
- Bars adjust over a 6" range to accommodate inboard and outboard Ultra Leg clearance.
- Finish is Black.

NOTES

» Reinforcement Bars cannot be used with Cantilever Brackets.

How to Specify

Step 1. Product Number

WRB Surface Reinforcement Bars, Pair

Step 2. Width

48 48" wide **60** 60" wide **72** 72" wide

Step 3. Paint Color Code

BK Black

Product Number	Description	Height		Width		Depth		Weight	
		in.	[mm]	in.	[mm]	in.	[mm]	lb.	[kg]
WRB48BK	Reinforcement bar, pair	2	51	49 ½	1257	2	51	15	6.8
WRB60BK	Reinforcement bar, pair	2	51	61 ½	1562	2	51	18	8.2
WRB72BK	Reinforcement bar, pair	2	51	73 ½	1867	2	51	21	9.5

Rev 07/31/14

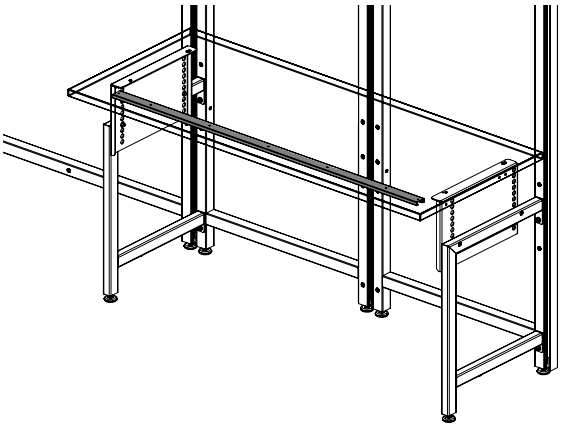

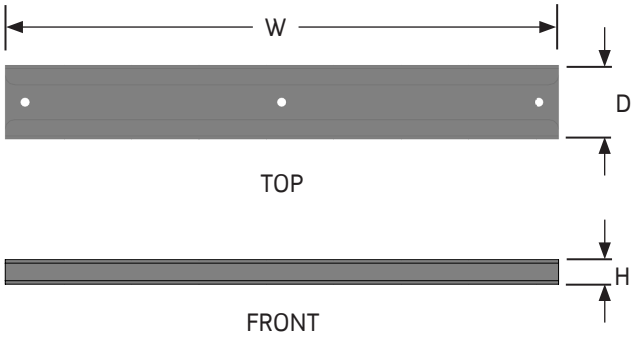

SURFACE SUPPORT BAR

- Sold individually, the Surface Support Bar provides horizontal support under standard surfaces for added support and weight load capacity up to 500lbs., evenly distributed.
- Support Bars can be used with surfaces supported by Cantilever Brackets, Work Surface B-Supports, Table Bases, and ErgoStats.
- Finish is Black.

How to Specify

Step 1. Product Number

SSB Surface Support Bar

Step 2. Width

48 48" wide
60 60" wide
72 72" wide
96 96" wide

Step 3. Paint Color Code

BK Black

Product Number	Description	Height		Width		Depth		Weight	
		in.	[mm]	in.	[mm]	in.	[mm]	lb.	[kg]
SSB48BK	Support Bar	⅝	16	38	965	1 ⅞	48	2	1
SSB60BK	Support Bar	⅝	16	50	1270	1 ⅞	48	3	1.4
SSB72BK	Support Bar	⅝	16	62	1575	1 ⅞	48	4	1.8
SSB96BK	Support Bar	⅝	16	86	2184	1 ⅞	48	5	2.5

Rev 02/18/25

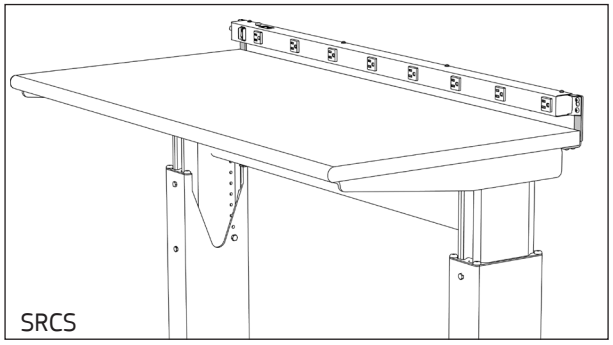

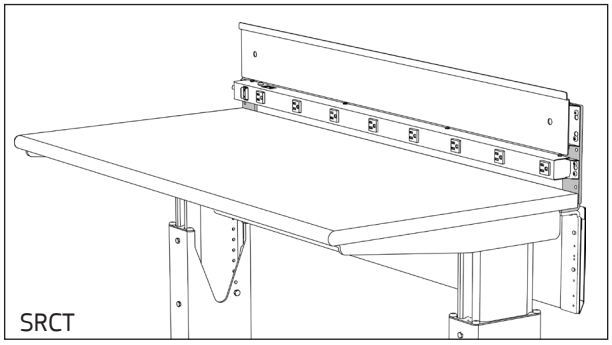

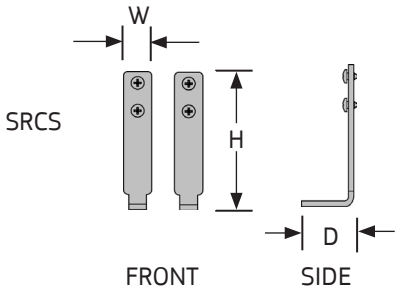

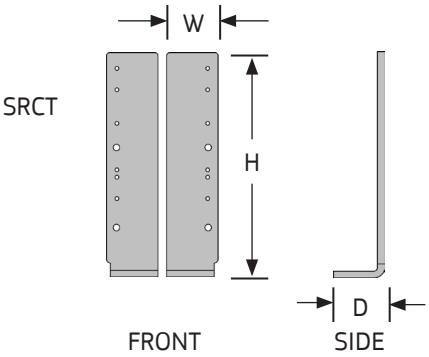

SURFACE ACCESSORY BRACKETS

- Brackets provide mounting locations for accessories above or below the surface.
- Short Surface Accessory Brackets are non-handed and mount Electric Plug Strips approximately 1" above the surface, or can be flipped over to mount plug strips 2½" below the surface.
- Tall Surface Accessory Brackets are handed and can be used to mount Dispensing Rails, Bin Rails, Slatwall Rails, Electric Plug Strips or Air Strips above the surface.
- The tall brackets can also be flipped over and mounted to the underside of the surface to support Frame-mount Cable Trays or Electric Plug Strips.
- Brackets are sold in pairs and mount to surfaces with wood screws.
- Finish is Black.

NOTES

» Two pairs of Tall Surface Accessory Brackets are shown in the image above.

» Ultra Surfaces, Standard Surfaces and Work Surfaces are not pre-drilled for Surface Accessory Brackets.

How to Specify

Step 1. Product Number

SRCS Surface Accessory Bracket, Short
SRCT Surface Accessory Bracket, Tall

Step 2. Paint Color Code

BK Black

Product Number	Description	Height		Width		Depth		Weight	
		in.	[mm]	in.	[mm]	in.	[mm]	lb.	[kg]
SRCSBK	Short bracket	4	102	¾	19	1 ½	38	1	0.5
SRCTBK	Tall bracket	8 ¼	210	2	51	1 ½	38	3	1.4

Rev 07/31/14

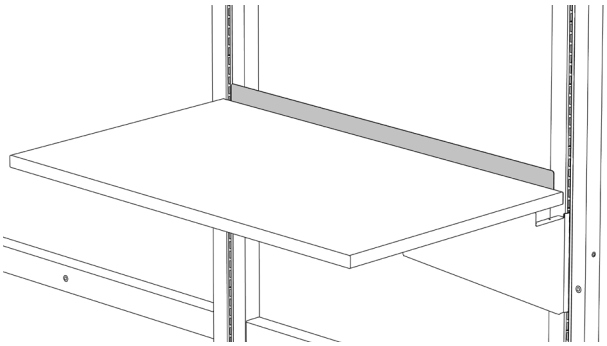

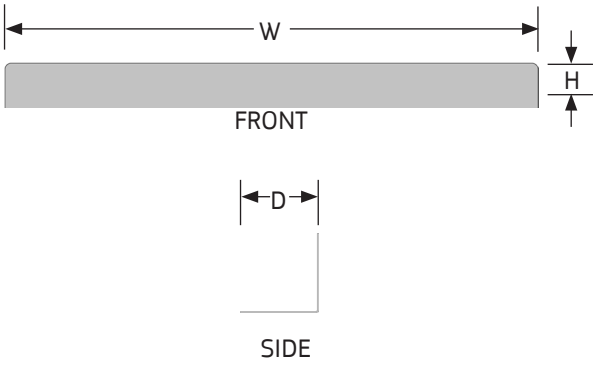

SURFACE BACK STOPS

- Surface Back Stops prevent equipment or small parts from falling off the back edge of surfaces.
- Steel stops provide a 1¾" raised edge above the back of 1¼" high surfaces.

NOTES

» Can be used together with Universal Cable Trays which are sold separately; see page 9.5.

How to Specify

Step 1. Product Number

BS Surface Back Stop

Step 2. Width

24 24" wide **30** 30" wide **36** 36" wide
48 48" wide **60** 60" wide **72** 72" wide

Step 3. Paint Color Code

STANDARD

AW Arctic White
AS Argent Silver
BK Black
BT Black Texture
GL Grey Light Smooth
GT Grey Light Texture
NW Neutral White
ST Sand Texture

Product Number	Description	Height		Width		Depth		Weight	
		in.	[mm]	in.	[mm]	in.	[mm]	lb.	[kg]
BS24	Back stop	3	76	21 ½	546	3	76	3	1.4
BS30	Back stop	3	76	27 ½	699	3	76	4	1.6
BS36	Back stop	3	76	33 ½	851	3	76	5	2.3
BS48	Back stop	3	76	45 ½	1156	3	76	6	2.7
BS60	Back stop	3	76	57 ½	1461	3	76	7	3.2
BS72	Back stop	3	76	69 ½	1765	3	76	8	3.6

Rev 04/01/19

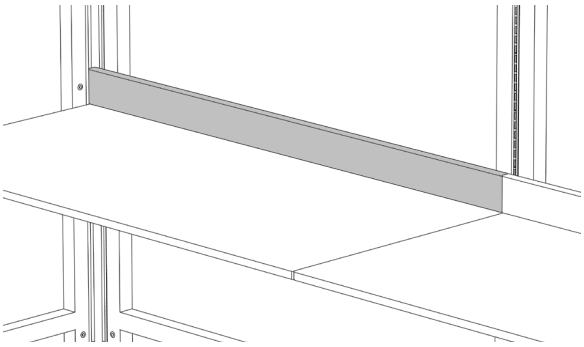

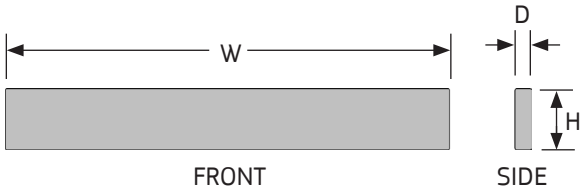

PHENOLIC BACKSPLASHES

- 4" high solid Phenolic Backsplashes have smooth ⅛" radius corners and edges.
- Phenolic resin material is specifically manufactured for highly corrosive environments and provides exceptional chemical and wear resistance. Contact the factory for detailed chemical resistance testing data.
- Finish is Black.

NOTES

» Mounting hardware is not included. Adhesive or thru-bolting to the horizontal surface is recommended.

How to Specify

Step 1. Product Number

BSP4 Phenolic Backsplash

Step 2. Width

24 24" wide **30** 30" wide **36** 36" wide
48 48" wide **60** 60" wide **72** 72" wide
96 96" wide

Step 3. Paint Color Code

BK Black

Product Number	Description	Height		Width		Depth		Weight	
		in.	[mm]	in.	[mm]	in.	[mm]	lb.	[kg]
BSP424BK	Backsplash	4	102	24	610	1	25	5	2.3
BSP430BK	Backsplash	4	102	30	762	1	25	6	2.7
PSP436BK	Backsplash	4	102	36	914	1	25	7	3.2
BSP448BK	Backsplash	4	102	48	1219	1	25	10	4.5
BSP460BK	Backsplash	4	102	60	1524	1	25	12	5.4
BSP472BK	Backsplash	4	102	72	1829	1	25	14	6.4
BSP496BK	Backsplash	4	102	96	2438	1	25	19	8.6

Rev 03/20/12

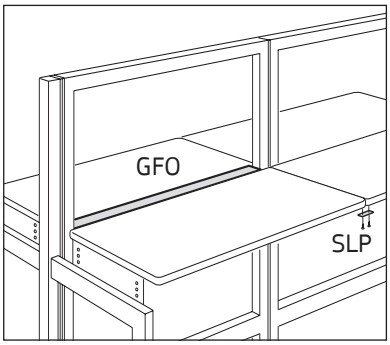

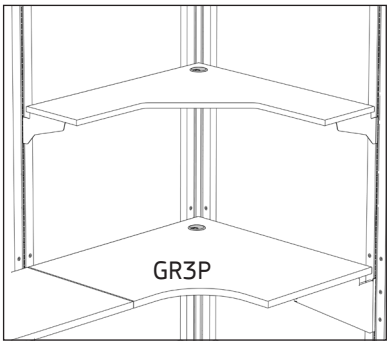

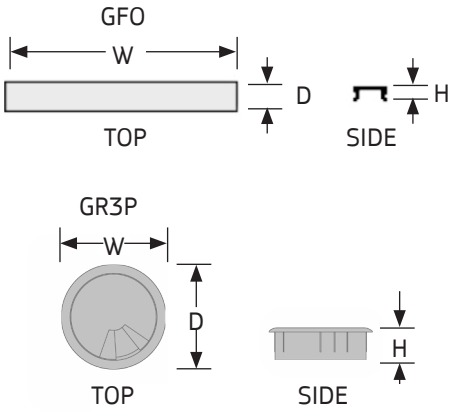

SURFACE GAP FILLERS AND LEVELING PLATES

Surface Gap Fillers

- Surface Gap Fillers cover the gaps between back-to-back surfaces mounted on UltraFrames.
- Painted steel fillers have a spring form fit and work with all surface types.
- Finish must be specified.

Surface Leveling Plates

- 10 gauge steel plates fasten to the underside of adjacent surfaces providing additional support and alignment for the front edges.
- Finish is Black.

Grommets

- Plastic wiring grommet provides power and data cable management through the work surface.
- Grommet has removable cap with adjustable opening for desired cable capacity.
- Field installed using a 3-⅛" (79mm) hole saw.
- Finish is Black.

NOTES

» Surface Leveling Plates are not to be used to attach Surface Peninsulas to adjacent surfaces.

How to Specify

Step 1. Product Number

GFO	Surface Gap Filler
SLP	Surface Leveling Plate
BR3P	Grommet

Step 2. Width (Gap Filler only)

30 30" wide **36** 36" wide **48** 48" wide
60 60" wide

Step 3. Paint Color Code (Gap Filler only)

STANDARD

AW	Arctic White	**GL**	Grey Light Smooth
AS	Argent Silver	**GT**	Grey Light Texture
BK	Black	**NW**	Neutral White
BT	Black Texture	**ST**	Sand Texture

Step 4. Color (Leveling Plate, Grommets only)

BK Black

Product Number	Description	Height		Width		Depth		Weight	
		in.	[mm]	in.	[mm]	in.	[mm]	lb.	[kg]
GFO30	Gap filler	1	25	26	660	5 ¼	133	2	0.9
GFO36	Gap filler	1	25	32	813	5 ¼	133	2	0.9
GFO48	Gap filler	1	25	44	1118	5 ¼	133	3	1.4
GFO60	Gap filler	1	25	55	1397	5 ¼	133	4	1.8
SLPBK	Leveling plate	⅛	3	3	76	¾	19	¼	0.1
GR3PBK	Grommet	1	25	3	76	3	76	1	0.5

Rev 04/01/19

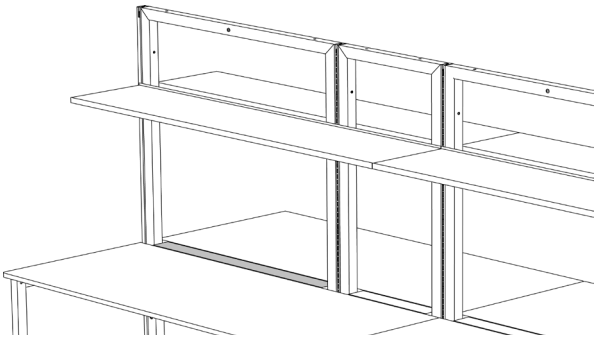

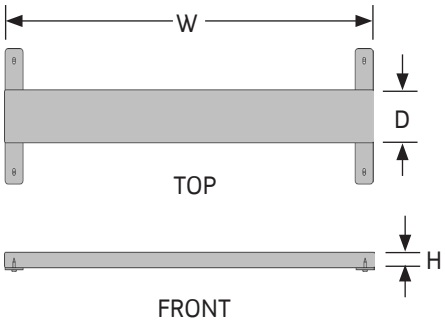

PHENOLIC GAP FILLERS

- 1" high solid Phenolic Resin Gap Fillers cover the gaps between back-to-back surfaces mounted on UltraFrames.
- Fillers have smooth ⅛" radius corners and edges.
- Phenolic resin material is specifically manufactured for highly corrosive environments and provides exceptional chemical and wear resistance. Contact the factory for detailed chemical resistance testing data.
- Finish is Black.

How to Specify

Step 1. Product Number

GFP Phenolic Gap Filler

Step 2. Width

24 24" wide **30** 30" wide **36** 36" wide
48 48" wide **60** 60" wide

Step 3. Paint Color Code

BK Black

Product Number	Description	Height		Width		Depth		Weight	
		in.	[mm]	in.	[mm]	in.	[mm]	lb.	[kg]
GFP24BK	Gap filler	1	25	18	457	3 ½	89	3	1.4
GFP30BK	Gap filler	1	25	24	610	3 ½	89	4	1.8
GFP36BK	Gap filler	1	25	30	762	3 ½	89	5	2.3
GFP48BK	Gap filler	1	25	42	1067	3 ½	89	7	3.2
GFP60BK	Gap filler	1	25	54	1372	3 ½	89	9	4.1

Rev 03/20/12

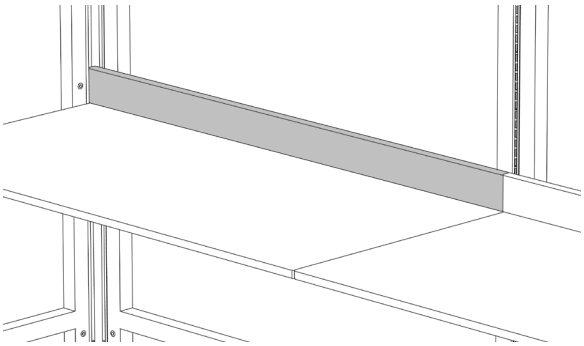

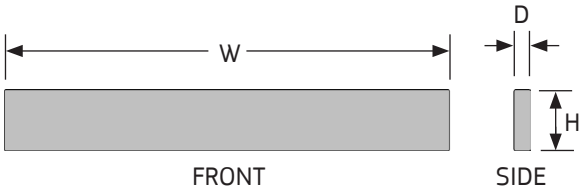

CORIAN BACKSPLASHES

- 4" high solid Corian Backsplashes have smooth ⅛" beveled top front edge. All other edges and corners have a slight break.
- Corian Backsplashes are used in areas where high chemical and wear resistance are required.

NOTES

» Mounting hardware is not included. A clear silicon adhesive should be used for adherence to the horizontal Corian surface is recommended.

How to Specify

Step 1. Product Number

BSK Corian Backsplash

Step 2. Width

24 24" wide **30** 30" wide **36** 36" wide
48 48" wide **60** 60" wide **72** 72" wide
96 96" wide

Step 3. Corian Color Code

SAE Arista Beige GRD 2 **SDN** Deep Nocturne GRD 3
SAG Arista Gray GRD 2 **SGX** Gray Onyx GRD 4
SBQ Bisque GRD 1 **SMW** Modern White GRD 2

Product Number	Description	Height		Width		Depth		Weight	
		in.	[mm]	in.	[mm]	in.	[mm]	lb.	[kg]
BSK424	Backsplash	4	102	24	610	1.25	32	6	2.5
BSK430	Backsplash	4	102	30	762	1.25	32	7	3.0
BSK436	Backsplash	4	102	36	914	1.25	32	8	3.7
BSK448	Backsplash	4	102	48	1219	1.25	32	11	5.0
BSK460	Backsplash	4	102	60	1524	1.25	32	14	6.2
BSK472	Backsplash	4	102	72	1829	1.25	32	16	7.4
BSK496	Backsplash	4	102	96	2438	1.25	32	22	10

Rev 09/23/25

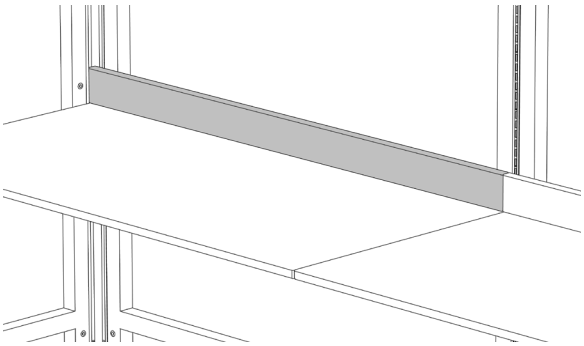

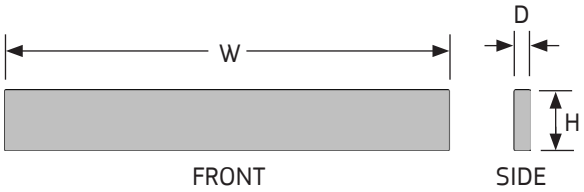

EPOXY BACKSPLASHES

- 4" high solid Epoxy Backsplashes have smooth ⅛" beveled top front edge. All other edges and corners contain a slight break.
- Epoxy resin material is specifically manufactured for highly corrosive environments and provides exceptional chemical and wear resistance. Contact the factory for detailed chemical resistance testing data.
- Finish is Black.

NOTES

» Mounting hardware is not included. Adhesive or thru-bolting to the horizontal surface is recommended.

» Other colors available; premium pricing. Consult factory.

How to Specify

Step 1. Product Number

BSE4 Epoxy Backsplash

Step 2. Width

24	24" wide	**30**	30" wide	**36**	36" wide
48	48" wide	**60**	60" wide	**72**	72" wide
96	96" wide				

Step 3. Color Code

BK Black

Product Number	Description	Height		Width		Depth		Weight	
		in.	[mm]	in.	[mm]	in.	[mm]	lb.	[kg]
BSE424BK	Epoxy Backsplash	4	102	24	610	1	25	7	3.3
BSE430BK	Epoxy Backsplash	4	102	30	762	1	25	9	4.2
BSE436BK	Epoxy Backsplash	4	102	36	914	1	25	11	5.0
BSE448BK	Epoxy Backsplash	4	102	48	1219	1	25	15	6.7
BSE460BK	Epoxy Backsplash	4	102	60	1524	1	25	18	8.3
BSE472BK	Epoxy Backsplash	4	102	72	1829	1	25	22	10.0
BSE496BK	Epoxy Backsplash	4	102	96	2438	1	25	29	13.3

Rev 05/16/24

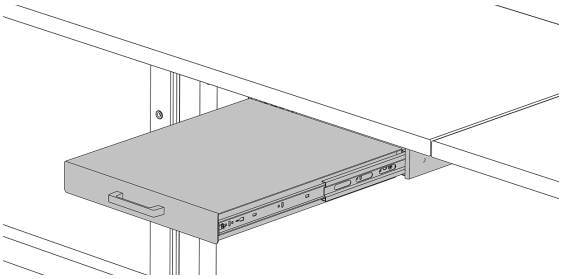

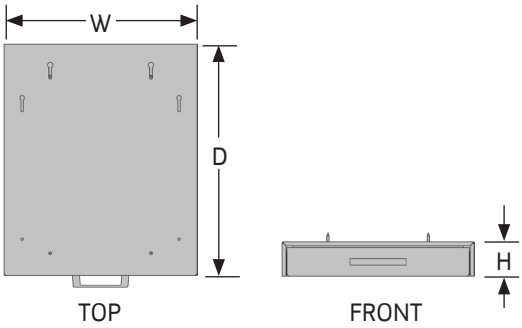

AUXILIARY SURFACE

- Steel platform and housing provides additional work surface space and mounts to surfaces or Storage Accessory Mounting Brackets.
- Surface features 18" full-extension ball-bearing slides with in and out detent.
- Load capacity 35 pounds evenly distributed.

How to Specify

Step 1. Product Number

AWS1518 **Auxiliary Surface**

Step 2. Paint Color Code

BK Black
BT Black Texture
GL Grey Light Smooth
GT Grey Light Texture
NW Neutral White
ST Sand Texture

Product Number	Description	Height		Width		Depth		Weight	
		in.	[mm]	in.	[mm]	in.	[mm]	lb.	[kg]
AWS1518	Auxiliary surface	2 5/8	67	15	381	18	457	16	7.0

Rev 04/01/19

THIS PAGE LEFT BLANK

GROUNDING HARDWARE

Grounding Hardware 5.2
Grounding Kits. 5.3

5

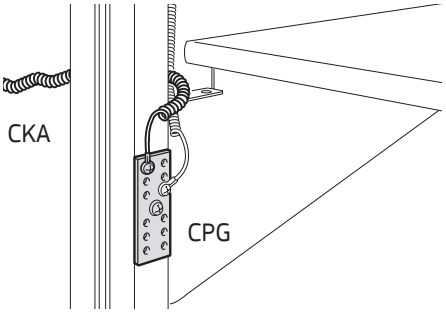

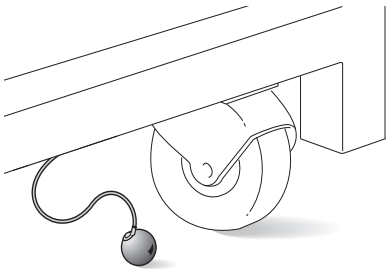

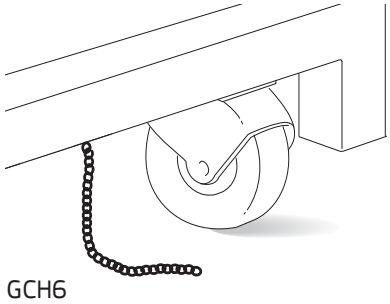

GROUNDING HARDWARE

Cable Kit Assemblies

- Cable Kit Assemblies provide for frame-to-frame grounding.
- Kits also provide for grounding of dissipative workstation components to the grounding captivators in frames, Plug Strips and Electrical Distributors.
- Assemblies consist of 48" fully extended coil cords with multi-stud ring terminals.

Common Point Grounds

- Common Point Grounds provide multiple grounding points for dissipative components in ESD workstations.
- Nickel plated steel plates attach to grounding points on UltraFrames, ErgoStat® Riser Frames and UltraFrame Spines.
- The ¼" thick plates measure 5" by 1¾".

Ground Balls

- Ground Balls provide grounding for dissipative UltraFrames with Casters to ESD floors.
- Assemblies consist of 1" diameter 10/10 steel back copper, chrome plated balls riveted to 6" nylon coated stainless steel cables with ¼" eyelets.
- Specify one Ground Ball per mobile workstation.

Ground Chains

- Ground Chains provide grounding for dissipative UltraFrames with Casters to ESD floors.
- Assemblies consist of two 6" tangle free chains composed of ¼" diameter stainless steel balls with ¼" eyelets.
- Specify one pair of Ground Chains per mobile workstation.
- All dissipative ErgoStats, Table Bases, WorkTables, Mobile Frames and Tote Frames come equipped with Ground Chains upon ordering.

How to Specify

Step 1. Product Number

CKA	Cable Kit Assembly
CPG	Common Point Ground
GBAL6	Ground Ball
GCH6	Ground Chain, pair

Product Number	Description	Weight lb.	Weight [kg]
CKA	Cable kit assembly	¼	.12
CPG	Common point ground	¼	.12
GBAL6	Ground ball	¼	.12
GCH6	Ground chain pair	¼	.12

Rev 05/08/12

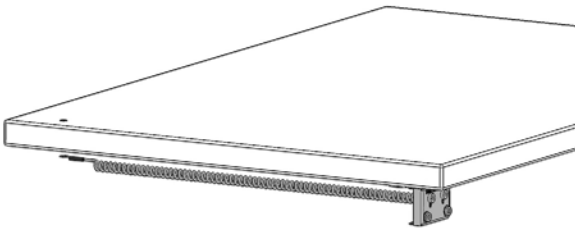

WGK

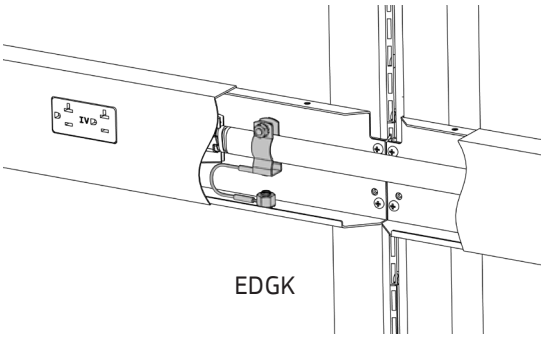

EDGK

GROUNDING KITS

Wrist Strap Grounding Kit

- Kits provide grounding for two wrist straps at one common point to ground.
- Attach to the underside of dissipative surface.
- Grounding block has two 4mm banana plug receptacles, and 48" fully extended coil cords with ring terminals.
- Includes two 10mm "parking studs" to prevent damage to wrist strap cord when not in use.
- Surfaces are not predrilled for Wrist Strap Grounding blocks.
- Wrist straps are not provided by Symbiote.
- Front face of WGK measures 2½" by 2".

Electrical Distributor Grounding Kit

- Electrical Distributor Grounding Kit provides a grounding point on the bottom of an Electrical Distributor when used in conjunction with an Electrical Distributor Jumper Cable and Entry Cable.
- Assembly includes a conduit clamp, ¼-20 threaded insert, and required mounting hardware.

NOTES

» Verify ESD ground path with an electrical tester before connecting components to the ground point.

How to Specify

Step 1. Product Number	
WGK	Wrist Strap Grounding Kit
EDGK	Electrical Distributor Grounding Kit

Product Number	Description	Weight lb.	Weight [kg]
WGK	Wrist strap grounding kit	¼	.12
EDGK	Electrical distributor grounding kit	¼	.12

Rev 08/11/21

SHELVING

Multi-Function Shelves 6.2
Shelf Add-On Lip 6.3
Center Shelves, Adjustable 6.4
Corner Shelves, Laminate With Brackets 6.5
Bookend Shelves. 6.6
High Density Shelves 6.7
Roll-Out Shelves 6.8
Shelf Dividers 6.9

6

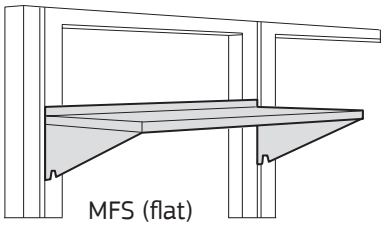

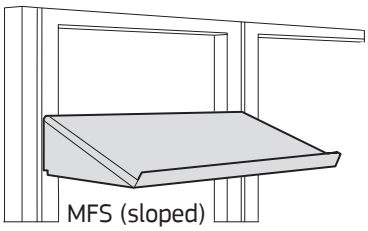

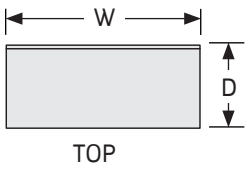

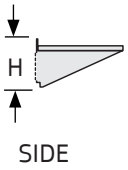

MULTI-FUNCTION SHELVES

- Multi-Function Shelves provide general storage in workstations.
- Assemblies include two steel support brackets and one shelf with a ½" raised edge that can be positioned in the front or back. No hardware or tools are needed for assembly.
- Shelves mount flat or in a sloped position.
- Load capacity 200 lbs. evenly distributed.

Shelf Depth	Shelf Slope
11"	24°
15"	17°
18"	21°
24"	15°

NOTES

» Shelf Add-on Lip sold separately; see page 6.3.

» Greenlee Manual Round Knockout Punches can be purchased for field installation of shelf grommets. See manufacturer's website.

How to Specify

Step 1. Product Number

MFS

Step 2. Depth

11 11" deep **15** 15" deep **18** 18" deep
24 24" deep

Step 3. Width

24 24" wide **30** 30" wide **36** 36" wide
48 48" wide **60** 60" wide **72*** 72" wide
*72" excludes 24" deep

Step 4. Paint Color Code

STANDARD

AW Arctic White
AS Argent Silver
BK Black
BT Black Texture
GL Grey Light Smooth
GT Grey Light Texture
NW Neutral White
ST Sand Texture

Product Number	Description	Height		Width		Depth		Weight	
		in.	[mm]	in.	[mm]	in.	[mm]	lb.	[kg]
MFS1124	Multi-function shelf	5 ½	140	24	610	11 ½	292	15	6.8
MFS1130	Multi-function shelf	5 ½	140	30	762	11 ½	292	17	7.7
MFS1136	Multi-function shelf	5 ½	140	36	914	11 ½	292	19	8.6
MFS1148	Multi-function shelf	5 ½	140	48	1219	11 ½	292	21	9.5
MFS1160	Multi-function shelf	5 ½	140	60	1524	11 ½	292	25	11.3
MFS1172	Multi-function shelf	5 ½	140	72	1829	11 ½	292	30	13.6
MFS1524	Multi-function shelf	5 ½	140	24	610	15	381	17	7.7
MFS1530	Multi-function shelf	5 ½	140	30	762	15	381	20	9.1
MFS1536	Multi-function shelf	5 ½	140	36	914	15	381	23	10.4
MFS1548	Multi-function shelf	5 ½	140	48	1219	15	381	27	12.2
MFS1560	Multi-function shelf	5 ½	140	60	1524	15	381	32	14.5
MFS1572	Multi-function shelf	5 ½	140	72	1829	15	381	37	16.8
MFS1824	Multi-function shelf	7 ½	191	24	610	18 ½	470	18	8.2
MFS1830	Multi-function shelf	7 ½	191	30	762	18 ½	470	22	10.0
MFS1836	Multi-function shelf	7 ½	191	36	914	18 ½	470	24	10.9
MFS1848	Multi-function shelf	7 ½	191	48	1219	18 ½	470	28	12.7
MFS1860	Multi-function shelf	7 ½	191	60	1524	18 ½	470	35	15.9
MFS1872	Multi-function shelf	7 ½	191	72	1829	18 ½	470	41	18.6
MFS2424	Multi-function shelf	7 ½	191	24	610	24	610	20	9.1
MFS2430	Multi-function shelf	7 ½	191	30	762	24	610	24	10.9
MFS2436	Multi-function shelf	7 ½	191	36	914	24	610	28	12.7
MFS2448	Multi-function shelf	7 ½	191	48	1219	24	610	36	16.3
MFS2460	Multi-function shelf	7 ½	191	60	1524	24	610	45	18.1

Rev 11/23/26

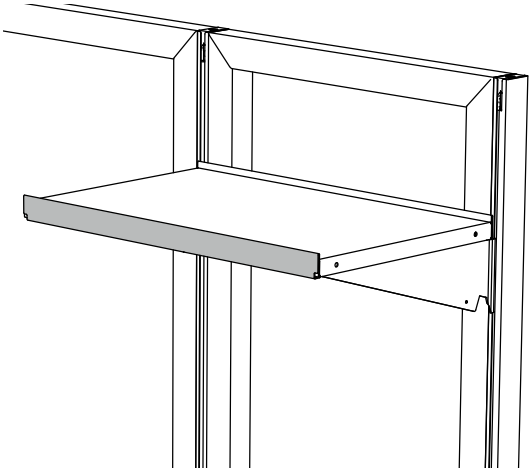

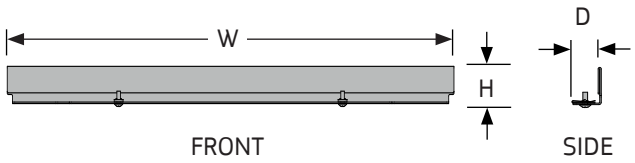

SHELF ADD-ON LIP

- Shelf Add-On Lip mounts to the front of Multi-Function Shelves, sold separately; see page 6.2
- One-piece steel assembly provides a lip to secure contents.

How to Specify

Step 1. Product Number

MFSL

Step 2. Width

24	24" wide	**30**	30" wide	**36**	36" wide
48	48" wide	**60**	60" wide	**72**	72" wide

Step 3. Paint Color Code

STANDARD

AW	Arctic White	**GL**	Grey Light Smooth
AS	Argent Silver	**GT**	Grey Light Texture
BK	Black	**NW**	Neutral White
BT	Black Texture	**ST**	Sand Texture

Product Number	Description	Height		Width		Depth		Weight	
		in.	[mm]	in.	[mm]	in.	[mm]	lb.	[kg]
MFSL24	Shelf add-on lip	1 ½	38	24	610	1 ⅛	29	2	0.9
MFSL30	Shelf add-on lip	1 ½	38	30	762	1 ⅛	29	2	0.9
MFSL36	Shelf add-on lip	1 ½	38	36	914	1 ⅛	29	3	1.4
MFSL48	Shelf add-on lip	1 ½	38	48	1219	1 ⅛	29	3	1.4
MFSL60	Shelf add-on lip	1 ½	38	60	1524	1 ⅛	29	4	1.8
MFSL72	Shelf add-on lip	1 ½	38	72	1829	1 ⅛	29	5	2.3

Rev 04/01/19

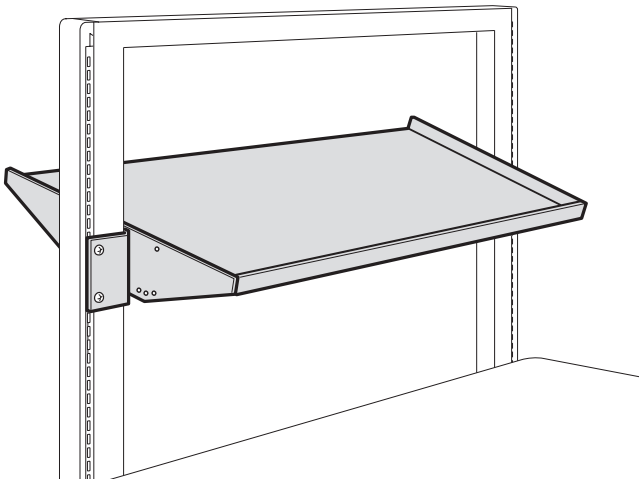

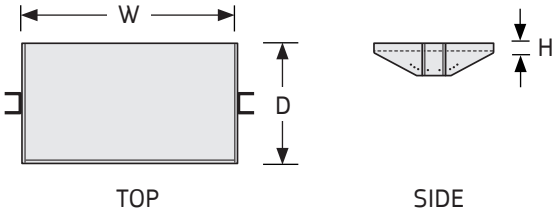

CENTER SHELVES, ADJUSTABLE

- Shelves provide general storage in workstations.
- Shelves mount within the openings of UltraFrames and can be center mounted or offset 4" to the front or back of the frames.
- Assemblies include two steel support brackets and one shelf with a ½" raised edge that can be positioned in the front or back. Positioning of the brackets provides raised edges on the left and right sides when mounted.
- Shelves mount flat or in one of two sloping positions, 8° or 16°. Slopes are set with threaded fasteners.
- Load capacity 200 lbs. evenly distributed.

NOTES

» Center Shelves cannot be mounted on ErgoStat Riser Spines.

How to Specify

Step 1. Product Number

CSA

Step 2. Width

24	24" wide	**30**	30" wide	**36**	36" wide
48	48" wide	**60**	60" wide		

Step 3. Paint Color Code

STANDARD

AW	Arctic White	**GL**	Grey Light Smooth
AS	Argent Silver	**GT**	Grey Light Texture
BK	Black	**NW**	Neutral White
BT	Black Texture	**ST**	Sand Texture

Product Number	Description	Height		Width		Depth		Weight	
		in.	[mm]	in.	[mm]	in.	[mm]	lb.	[kg]
CSA24	Center shelf	4 ¾	121	18	457	24	610	19	8.6
CSA30	Center shelf	4 ¾	121	24	610	24	610	23	10.4
CSA36	Center shelf	4 ¾	121	30	762	24	610	25	11.3
CSA48	Center shelf	4 ¾	121	42	1067	24	610	30	13.6
CSA60	Center shelf	4 ¾	121	54	1372	24	610	37	16.8

Rev 04/01/19

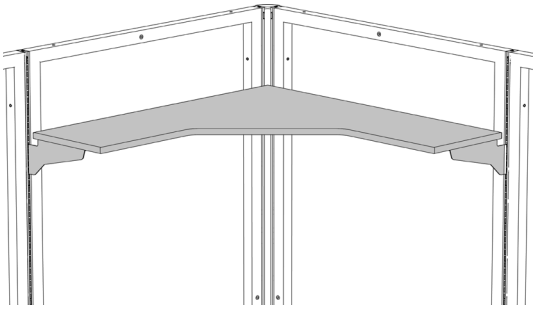

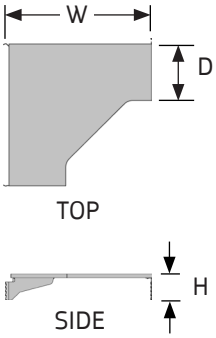

CORNER SHELVES, LAMINATE WITH BRACKETS

- Shelves provide general storage in corner workstations.
- The 1" high double-sided laminate shelves include matching vinyl Edge-band.
- Assemblies include three steel support brackets which are notched to allow for the routing of cables.
- Nevamar® Static Dissipative Laminate (SDL) surfaces have a Point to point and point to ground resistance of 1 x 106 to 1 x 109 ohms @ 10-60% relative humidity. Conforms to ESD Association Standard ESD-S4.1.
- Dissipative shelves are manufactured using dissipative laminate on the top side with matching non-dissipative laminate on the underside and each include a Laminate Grounding Terminal Kit.

NOTES

» Corner Shelves are predrilled for Universal Cable Trays; see page 9.5.
» 36" and 48" wide shelves are predrilled for Shelf Mount Light Brackets for 32" wide LED High Performance Task Lights; see page 8.7.
» Other dissipative laminates available upon request; consult factory.
» Customers are responsible for specifying ESD surface requirements; corporate ESD standards must be consulted prior to ordering.

How to Specify

Step 1. Product Number

CSL Corner Shelf, laminate
CDS Corner Shelf, dissipative

Step 2. Depth

15 15" deep **18** 18" deep

Step 3. Width

24 24" wide **30** 30" wide **36** 36" wide
48 48" wide

Step 5. Laminate color code (select one)

STANDARD

AW Arctic White
BK Black
GF Grey Fleck
GL Grey Light
NW Neutral White
SA Sand
WF White Fleck

DISSIPATIVE

DBK Dissipative Black
DG Dissipative Grey Light
DNW Dissipative Neutral White
DW Dissipative White

Step 4. Paint Color Code

STANDARD

AW Arctic White
AS Argent Silver
BK Black
BT Black Texture
GL Grey Light Smooth
GT Grey Light Texture
NW Neutral White
ST Sand Texture

Product Number	Description	Height		Width		Depth		Weight	
		in.	[mm]	in.	[mm]	in.	[mm]	lb.	[kg]
CSL1524	Corner shelf, standard laminate	6 ½	165	24	610	15	381	20	9.1
CSL1530	Corner shelf, standard laminate	6 ½	165	30	762	15	381	28	12.7
CSL1536	Corner shelf, standard laminate	6 ½	165	36	914	15	381	41	18.6
CSL1548	Corner shelf, standard laminate	6 ½	165	48	1219	15	381	70	31.8
CSL1824	Corner shelf, standard laminate	6 ½	165	24	610	18 ½	470	22	10.0
CSL1830	Corner shelf, standard laminate	6 ½	165	30	762	18 ½	470	30	13.6
CSL1836	Corner shelf, standard laminate	6 ½	165	36	914	18 ½	470	43	19.5
CSL1848	Corner shelf, standard laminate	6 ½	165	48	1219	18 ½	470	72	32.7
CSD1524	Corner shelf, dissipative	6 ½	165	24	610	15	381	20	9.1
CSD1530	Corner shelf, dissipative	6 ½	165	30	762	15	381	28	12.7
CSD1536	Corner shelf, dissipative	6 ½	165	36	914	15	381	41	18.6
CSD1548	Corner shelf, dissipative	6 ½	165	48	1219	15	381	70	31.8
CSD1824	Corner shelf, dissipative	6 ½	165	24	610	18 ½	470	22	10.0
CSD1830	Corner shelf, dissipative	6 ½	165	30	762	18 ½	470	30	13.6
CSD1836	Corner shelf, dissipative	6 ½	165	36	914	18 ½	470	43	19.5
CSD1848	Corner shelf, dissipative	6 ½	165	48	1219	18 ½	470	72	32.7

Rev 11/23/26

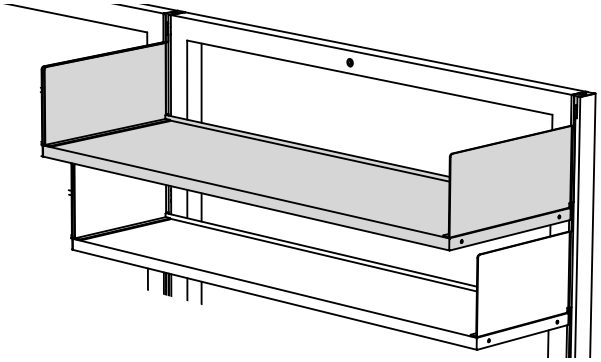

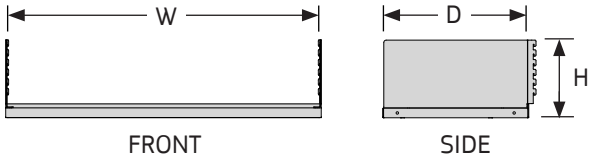

BOOKEND SHELVES

- Bookend Shelves mount on a frame or wall strips, providing general storage.
- Shelf can be oriented with the ½" raised edge facing toward the front or back.
- Load capacity 200 lbs. evenly distributed.

How to Specify

Step 1. Product Number

BES

Step 2. Depth

11 11" deep **15** 15" deep **18** 18" deep

Step 3. Width

24 24" wide **30** 30" wide **36** 36" wide
48 48" wide **60** 60" wide **72** 72" wide

Step 4. Paint Color Code

AW Arctic White
AS Argent Silver
BK Black
BT Black Texture
GL Grey Light Smooth
GT Grey Light Texture
NW Neutral White
ST Sand Texture

Product Number	Description	Height		Width		Depth		Weight	
		in.	[mm]	in.	[mm]	in.	[mm]	lb.	[kg]
BES1124	Bookend shelf	8	203	24	610	11 ½	292	18	8.2
BES1130	Bookend shelf	8	203	30	762	11 ½	292	20	9.1
BES1136	Bookend shelf	8	203	36	914	11 ½	292	22	10.0
BES1148	Bookend shelf	8	203	48	1219	11 ½	292	24	10.9
BES1160	Bookend shelf	8	203	60	1524	11 ½	292	28	12.7
BES1172	Bookend shelf	8	203	72	1829	11 ½	292	33	15.0
BES1524	Bookend shelf	8	203	24	610	15	381	21	9.5
BES1530	Bookend shelf	8	203	30	762	15	381	24	10.9
BES1536	Bookend shelf	8	203	36	914	15	381	27	12.2
BES1548	Bookend shelf	8	203	48	1219	15	381	31	14.1
BES1560	Bookend shelf	8	203	60	1524	15	381	36	16.3
BES1572	Bookend shelf	8	203	72	1829	15	381	41	18.6
BES1824	Bookend shelf	8	203	24	610	18 ½	470	21	9.5
BES1830	Bookend shelf	8	203	30	762	18 ½	470	25	11.3
BES1836	Bookend shelf	8	203	36	914	18 ½	470	27	12.2
BES1848	Bookend shelf	8	203	48	1219	18 ½	470	31	14.1
BES1860	Bookend shelf	8	203	60	1524	18 ½	470	38	17.2
BES1872	Bookend shelf	8	203	72	1829	18 ½	470	44	20.0

Rev 11/23/26

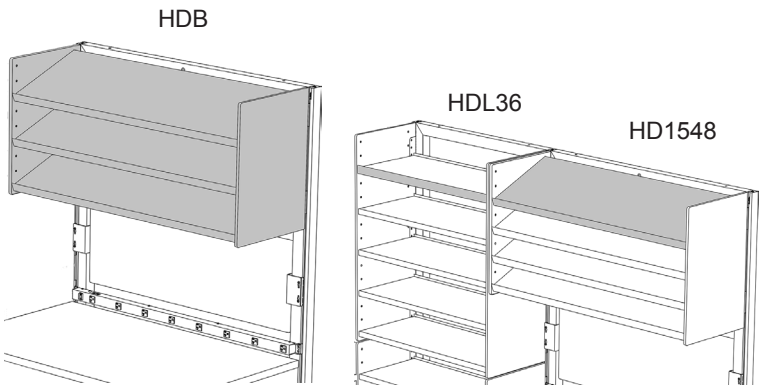

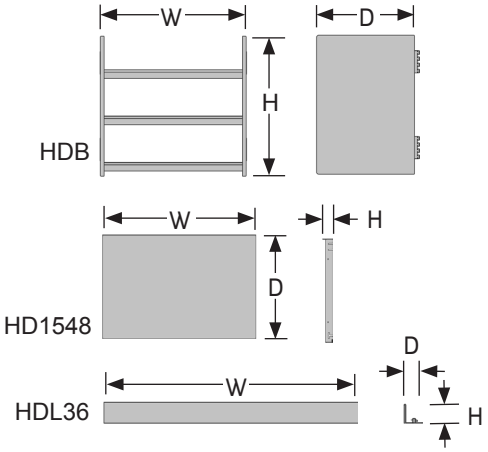

HIGH DENSITY SHELVES

- High density shelves mount on a frame or wall strips.
- Shelves are vertically adjustable in 2½" increments and can be installed in three positions (flat, 11 and 22 degrees).
- Available as a three shelf or five shelf unit.
- Load capacity is 200 lbs. per unit (both three and five shelf units).
- Add-on shelves and front shelf lips also available.

NOTES

» End panels are constructed of MDF board and are powder coated.
» Mounting brackets and shelves are metal and color matched.

How to Specify

Step 1. Product Number

HDB HD Shelf, 3-unit
HDC HD Shelf, 5-unit
HD HD Add-on Shelf
HDL HD Shelf Lip

Step 2. Depth (Shelf only)

15 15" deep

Step 3. Width

24 24" wide **30** 30" wide **36** 36" wide
48 48" wide **60** 60" wide

Step 4. Paint Color Code

BK Black
GL Grey Light Smooth
NW Neutral White

Product Number	Description	Height		Width		Depth		Weight	
		in.	[mm]	in.	[mm]	in.	[mm]	lb.	[kg]
HDB1524	Shelf, 3 unit	22 ¾	578	24	610	16	406	37	16.8
HDB1530	Shelf, 3 unit	22 ¾	578	30	762	16	406	42	19.1
HDB1536	Shelf, 3 unit	22 ¾	578	36	914	16	406	48	21.8
HDB1548	Shelf, 3 unit	22 ¾	578	48	1219	16	406	59	26.8
HDB1560	Shelf, 3 unit	22 ¾	578	60	1524	16	406	71	32.2
HDC1524	Shelf, 5 unit	37 ¾	959	24	610	16	406	60	27.2
HDC1530	Shelf, 5 unit	37 ¾	959	30	762	16	406	69	31.3
HDC1536	Shelf, 5 unit	37 ¾	959	36	914	16	406	79	35.8
HDC1548	Shelf, 5 unit	37 ¾	959	48	1219	16	406	98	44.5
HDC1560	Shelf, 5 unit	37 ¾	959	60	1524	16	406	117	53.1
HD1524	Add-on shelf	1	25	22 ½	572	15 ¼	387	8	3.6
HD1530	Add-on shelf	1	25	28 ½	724	15 ¼	387	10	4.5
HD1536	Add-on shelf	1	25	34 ½	876	15 ¼	387	12	5.4
HD1548	Add-on shelf	1	25	46 ½	1181	15 ¼	387	15	6.8
HD1560	Add-on shelf	1	25	58 ½	1486	15 ¼	387	19	8.6
HDL24	Shelf lip	1 ½	38	22 ½	572	1	25	1 ½	0.7
HDL30	Shelf lip	1 ½	38	28 ½	724	1	25	2	0.9
HDL36	Shelf lip	1 ½	38	34 ½	876	1	25	2 ½	1.1
HDL48	Shelf lip	1 ½	38	46 ½	1181	1	25	3	1.4
HDL60	Shelf lip	1 ½	38	58 ½	1486	1	25	4	1.8

Rev 11/23/26

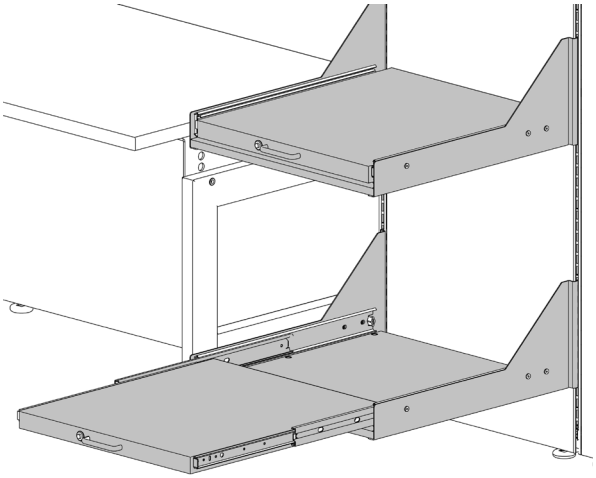

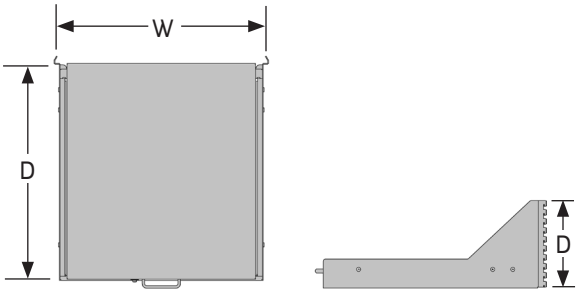

ROLL-OUT SHELVES

- Shelves provide general storage in workstations.
- Shelves roll out for easy access to the backside of the shelf and lock in the closed position using the push-button release adjacent to the handle of the front of the shelf.
- Assemblies include full-extension ball-bearing slides, two steel support brackets, a stretcher and a shelf with a single handle and push-button release allowing one-handed operation of the shelf lock.
- Shelves extend from the front of the 21⅞" brackets when fully extended. Handle extends 1¼" from the front of the shelf.
- Load capacity 150 lbs. evenly distributed.

NOTES

» Shelf cannot be mounted next to Ultra Legs attached to the same UltraFrame. Connector Posts with Ultra Legs or return frames must be used for support.

» No more than one loaded shelf should be extended at the same time.

» Extended Ultra Legs or 30" wide return frames are recommended; consult factory for design guidelines.

How to Specify

Step 1. Product Number

RSM24

Step 2. Width

24 24" wide **30** 30" wide

Step 3. Paint Color Code

STANDARD

AW	Arctic White	**GL**	Grey Light Smooth
AS	Argent Silver	**GT**	Grey Light Texture
BK	Black	**NW**	Neutral White
BT	Black Texture	**ST**	Sand Texture

Product Number	Description	Height		Width		Depth		Weight	
		in.	[mm]	in.	[mm]	in.	[mm]	lb.	[kg]
RSM2424	Roll-out shelf	9 ¾	248	22 ½	572	24 ¼	616	46	20.9
RSM2430	Roll-out shelf	9 ¾	248	28 ½	724	24 ¼	616	53	24.0

Rev 01/29/25

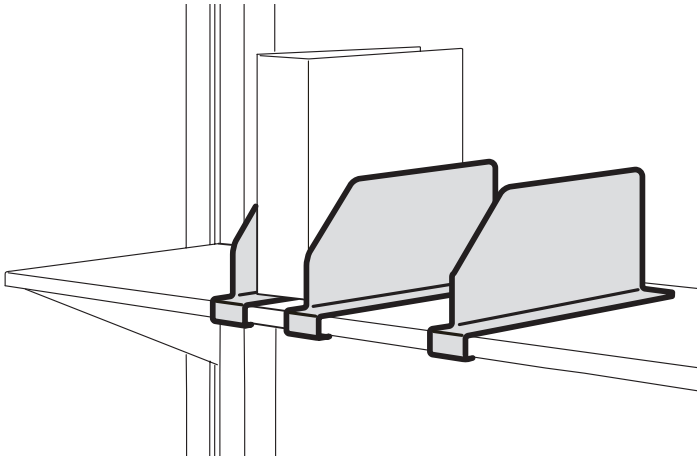

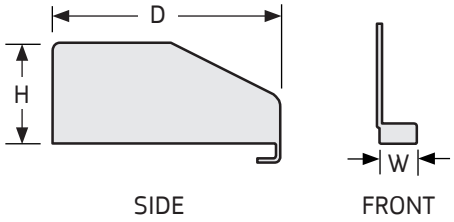

SHELF DIVIDERS

- Dividers vertically separate paper, folders, books and binders on shelves.
- Dividers mount to Multi-function, Low Profile, General Purpose, Center and Bookend Shelves in the flat position only.
- Scored mounting tabs allow for easy bending to hold Shelf Dividers in place once installed on shelves.
- Dividers are sold in packages of 5.

NOTES

» Shelf Dividers will not mount on Corner, Wire, Roll-out Shelves or Storage Cabinets.

How to Specify

Step 1. Product Number

SDV511

Step 2. Paint Color Code

STANDARD

AW	Arctic White	**GL**	Grey Light Smooth
AS	Argent Silver	**GT***	Grey Light Texture
BK	Black	**NW**	Neutral White
BT*	Black Texture	**ST***	Sand Texture

Product Number	Description	Height		Width		Depth		Weight	
		in.	[mm]	in.	[mm]	in.	[mm]	lb.	[kg]
SDV511	Shelf dividers	5 ½	140	1 ¾	44	11	279	6	2.7

Rev 04/01/19

STORAGE AND DISPLAY

Tackboards 7.2
Pegboards 7.3
Magnetic White Boards 7.4
Storage Cabinets 7.5
Pedestals, Hanging and Mobile 7.6
Pencil Drawer 7.7
Accessory Mounting Brackets 7.8
Utility Dispenser Mounting Bracket 7.9
Accessory Rails 7.10
Accessory Rail Dispenser Bracketry 7.11
Accessory Rail Dispenser Boxes and Bins 7.12
Accessory Rail Baskets 7.13
Accessory Rail Hooks 7.14
Accessory Rail Shelves and Organization Tools 7.15

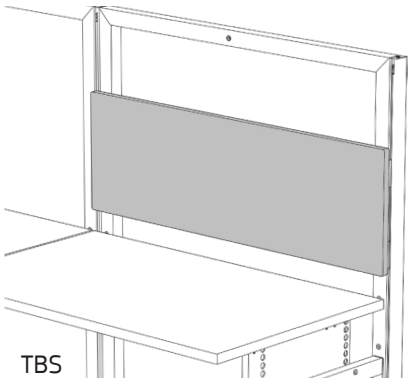

TBS
(single-sided)

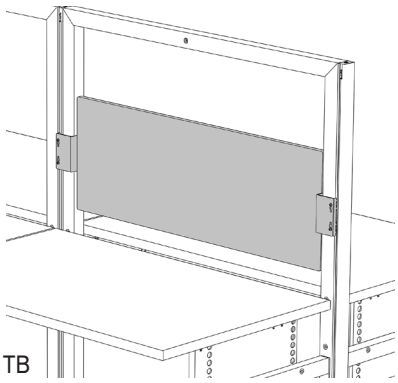

TB
(double-sided)

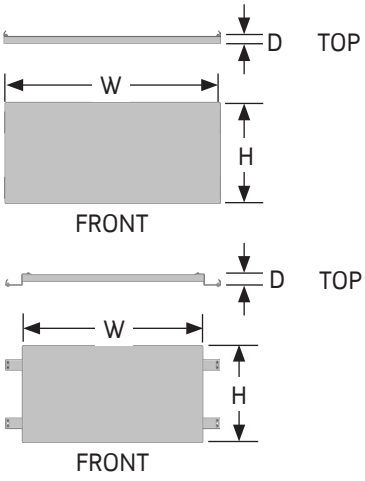

TACKBOARDS

- Tackboards provide for the display of notes, prints, drawings and other items in workstations.
- Opposite side of Single-Sided Tackboards are finished with cardboard backers.
- Double-Sided Tackboards mount within the openings of UltraFrames and ErgoStat® Riser Frames with color matched brackets. Fabric encases the core material for a frameless appearance.

NOTES

» Two Single-Sided Tackboards cannot be mounted level with each other in a corner condition. Two Double-Sided Tackboards can be mounted in a corner condition.

» Customer's Own Material (COM) is accepted. Consult factory.

How to Specify

Step 1. Product Number

TBS15 Tackboard, single-sided
TB15 Tackboard, double-sided

Step 2. Width

24 24" wide **30** 30" wide **36** 36" wide
48 48" wide **60** 60" wide

Step 3. Bracket Paint Finish

Double-Sided Tackboards only

AW Arctic White **GL** Grey Light Smooth
AS Argent Silver **GT** Grey Light Texture
BK Black **NW** Neutral White
BT Black Texture **ST** Sand Texture

Step 4. Fabric color

Standard Fabrics

A2035 Angora **A2084** Geranium
A2053 Asteroid **A2079** Graphite
A2047 Eucalyptus **A2691** Waterfall

Product Number	Description	Height		Width		Depth		Weight	
		in.	[mm]	in.	[mm]	in.	[mm]	lb.	[kg]
TBS1524	Single-sided	15 ½	394	24	610	1	25	4	1.8
TBS1530	Single-sided	15 ½	394	30	762	1	25	5	2.3
TBS1536	Single-sided	15 ½	394	36	914	1	25	6	2.7
TBS1548	Single-sided	15 ½	394	48	1219	1	25	7	3.2
TBS1560	Single-sided	15 ½	394	60	1524	1	25	8	3.6
TB1524	Double-sided	15	381	24	610	1	25	7	3.2
TB1530	Double-sided	15	381	30	762	1	25	9	4.1
TB1536	Double-sided	15	381	36	914	1	25	11	5.0
TB1548	Double-sided	15	381	48	1219	1	25	14	6.4
TB1560	Double-sided	15	381	60	1524	1	25	20	9.1

Rev 11/23/26

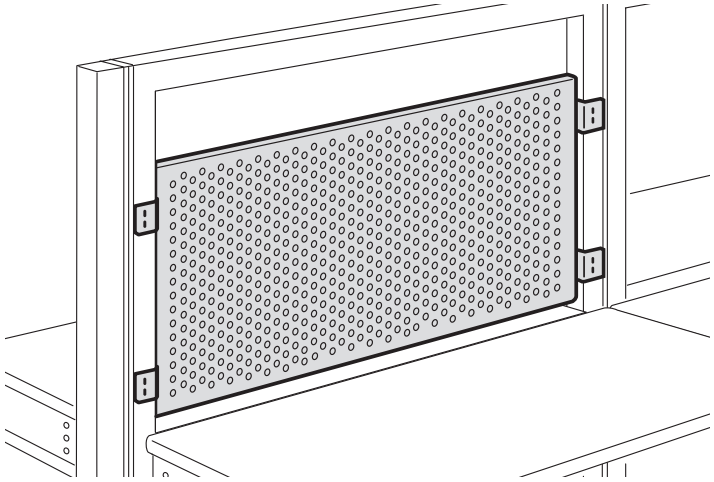

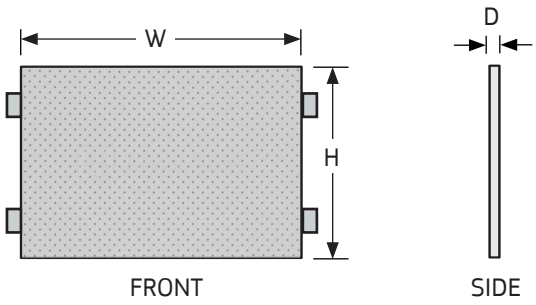

PEGBOARDS

- Pegboards provide for the display of tools and work aids in workstations.
- Pegboards are formed of steel and feature ¼" holes.
- Pegboards mount within the openings of UltraFrames and ErgoStat® Riser Frames with four brackets.
- Load capacity 100 lbs. evenly distributed.

NOTES

» Pegboards are single-sided; items cannot be hung from the opposite side.
» Saddle Mount Monitor Arms can be used with Pegboards. One Saddle Mount can be utilized between the mounting brackets.
» Two Pegboards can be mounted back-to-back in a single frame opening. Pegboards cannot be mounted back-to-back with Double-Sided Tackboards or Magnetic White Boards.

How to Specify

Step 1. Product Number

PB24

Step 2. Width

24 24" wide **30** 30" wide **36** 36" wide
48 48" wide **60** 60" wide

Step 3. Paint Color Code

STANDARD

AW Arctic White
AS Argent Silver
BK Black
BT Black Texture
GL Grey Light Smooth
GT Grey Light Texture
NW Neutral White
ST Sand Texture

Product Number	Description	Height		Width		Depth		Weight	
		in.	[mm]	in.	[mm]	in.	[mm]	lb.	[kg]
PB2424	Pegboard	24	610	18 ¼	464	¾	19	9	4.1
PB2430	Pegboard	24	610	24 ¼	616	¾	19	13	5.9
PB2436	Pegboard	24	610	30 ¼	768	¾	19	15	6.8
PB2448	Pegboard	24	610	42 ¼	1073	¾	19	20	9.1
PB2460	Pegboard	24	610	54 ¼	1378	¾	19	25	11.3

Rev 8/15/26

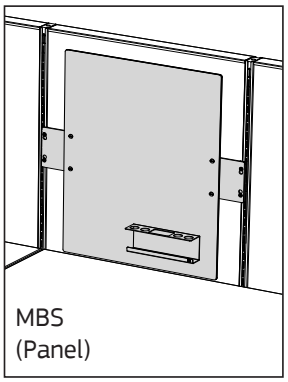
MBS
(Panel)

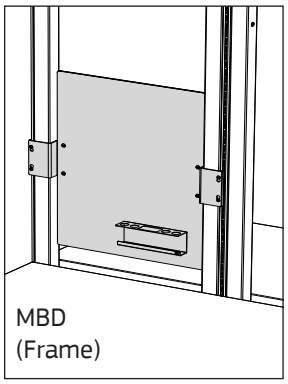
MBD
(Frame)

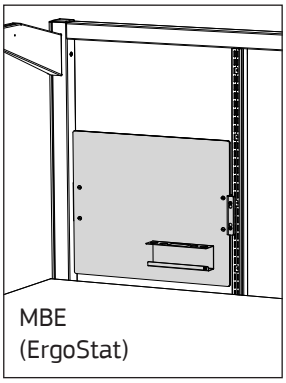
MBE
(ErgoStat)

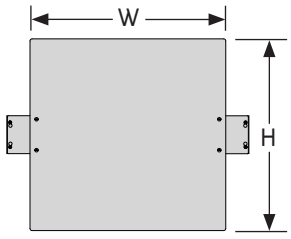

FRONT



SIDE

MAGNETIC WHITE BOARDS

- Each board provides a white erasable writing surface and magnetic capability on either one or two sides of the workstation.
- Frame-mount and ErgoStat® White Boards mount within the opening of UltraFrames and ErgoStat Riser Frames with two color-matched brackets (MBS, MBD) and one color-matched bracket (MBE).
- Frame-mount board brackets allow for boards to be mounted centered or flush with one side of the frame.
- Each White Board includes a color-matched magnetic marker tray and color-matched bracket/s.

NOTES

» ErgoStat Magnetic White Boards can only be mounted on Riser Frames.

How to Specify

Step 1. Product Number

MBS24 Magnetic White board, panel-mount
MBD24 Magnetic White board, frame-mount
MBE18 Magnetic Whiteboard, ErgoStat

Step 2. Width

24 24" wide **30** 30" wide **36** 36" wide
48 48" wide **60** 60" wide

Step 3. Paint Color Code

AW Arctic White
AS Argent Silver
BK Black
BT Black Texture
GL Grey Light Smooth
GT Grey Light Texture
NW Neutral White
ST Sand Texture

PRODUCT NUMBER	DESCRIPTION	HEIGHT		WIDTH		DEPTH		WEIGHT	
		IN.	[MM]	IN.	[MM]	IN.	[MM]	LB.	[KG]
MBS2424	Magnetic white board, panel-mount	23 ¾	603	18 ¼	464	0	4	5	2
MBS2430	Magnetic white board, panel-mount	23 ¾	603	24 ¼	616	0	4	6	3
MBS2436	Magnetic white board, panel-mount	23 ¾	603	30 ¼	768	0	4	6	3
MBS2448	Magnetic white board, panel-mount	23 ¾	603	42 ¼	1073	0	4	7	3
MBS2460	Magnetic white board, panel-mount	23 ¾	603	54 ¼	1378	0	4	9	4
MBD2424	Magnetic white board, frame-mount	23 ¾	603	18 ¼	464	0	4	9	4
MBD2430	Magnetic white board, frame-mount	23 ¾	603	24 ¼	616	0	4	12	5
MBD2436	Magnetic white board, frame-mount	23 ¾	603	30 ¼	768	0	4	15	7
MBD2448	Magnetic white board, frame-mount	23 ¾	603	42 ¼	1073	0	4	17	8
MBD2460	Magnetic white board, frame-mount	23 ¾	603	54 ¼	1378	0	4	20	9
MBE1824	Magnetic whiteboard, ErgoStat	17 ¾	451	20 ¼	514	0	4	4	2
MBE1830	Magnetic whiteboard, ErgoStat	17 ¾	451	26 ¼	667	0	4	4	2
MBE1836	Magnetic whiteboard, ErgoStat	17 ¾	451	32 ¼	819	0	4	5	2

Rev 11/23/26

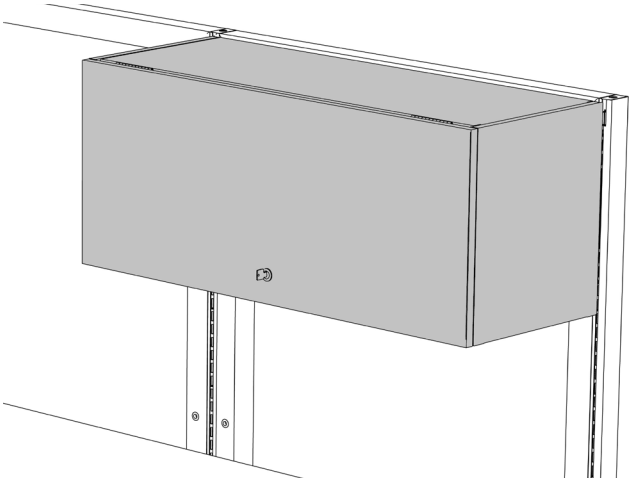

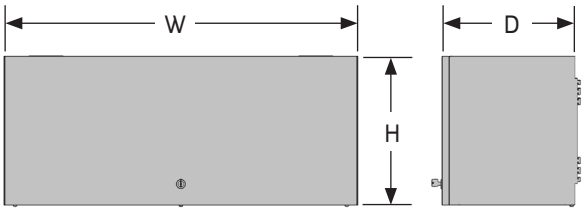

STORAGE CABINETS

- Storage Cabinets provide secure storage in workstations.
- Steel assemblies each include two shelf ends, a bottom shelf, one door unit including top and a back panel.
- Doors retract above the top panel and are equipped with individual key locks for security.
- Storage cabinets meet or exceed ANSI-BIFMA standards for safety and reliability.

NOTES

» Storage Cabinet doors are keyed randomly and differently from the other. Contact factory for other keying options. Available key numbers are UM226 thru UM425.

How to Specify

Step 1. Product Number

SCA

Step 2. Width

24	24" wide	**30**	30" wide	**36**	36" wide
48	48" wide	**60**	60" wide		

Step 3. Paint Color Code

AW	Arctic White	**GL**	Grey Light Smooth
AS	Argent Silver	**GT**	Grey Light Texture
BK	Black	**NW**	Neutral White
BT	Black Texture	**ST**	Sand Texture

Product Number	Description	Height		Width		Depth		Weight	
		in.	[mm]	in.	[mm]	in.	[mm]	lb.	[kg]
SCA24	Storage cabinet	15	381	24	610	13 ½	343	38	17.2
SCA30	Storage cabinet	15	381	30	762	13 ½	343	42	19.1
SCA36	Storage cabinet	15	381	36	914	13 ½	343	49	22.2
SCA48	Storage cabinet	15	381	48	1219	13 ½	343	58	26.3
SCA60	Storage cabinet	15	381	60	1524	13 ½	343	68	30.8

Rev 01/16/20

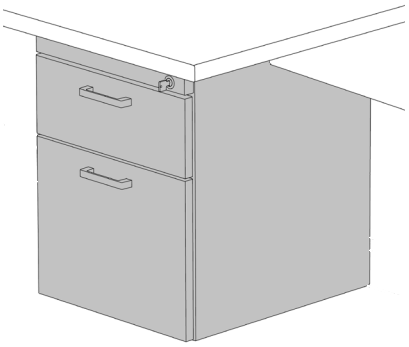

PH

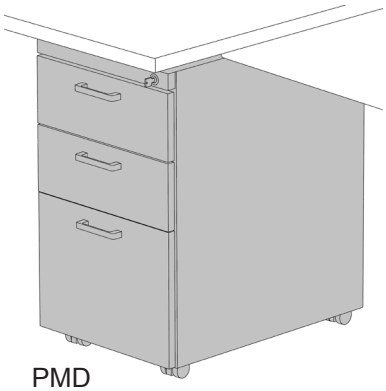

PMD

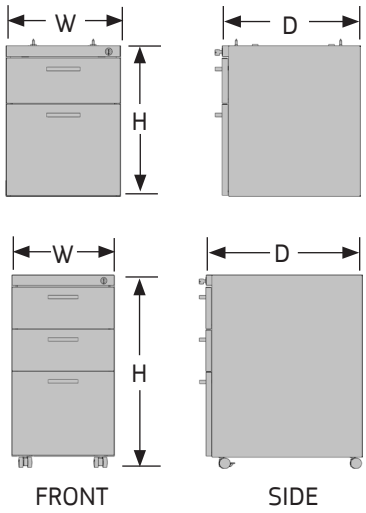

FRONT SIDE

PEDESTALS, HANGING AND MOBILE

- Double-wall drawer fronts and drawer sides.
- Drawers feature ball-bearing slides with quick disconnect and anti-rebound features (full-extension slides on file drawers, ¾ extension on box drawers).
- Pedestals meet or exceed ANSI-BIFMA standards for safety and reliability.
- Mobile Pedestals include two front locking black casters, two rear non-locking black casters and have a solid metal top.
- Load capacity up to 50 lbs. per drawer; not to exceed 150 lbs. per unit.

NOTES

» Other drawer depths available; consult factory.

» Pedestal drawers are keyed randomly and differently from the other. Contact factory for other keying options. Available key numbers are UM226 thru UM425.

How to Specify

Step 1. Product Number

PH Ped, Hanging
PMD Ped, Mobile

Step 2. Drawer Configuration

HANGING		MOBILE
12	**1212**	**1212**
612	**6612**	**612**
6	**66**	**666**
666	**6666**	**6666**

Step 3. Paint Color Code

BK Black
GL Grey Light Smooth
NW Neutral White

Product Number	Description	Height		Width		Depth		Weight	
		in.	[mm]	in.	[mm]	in.	[mm]	lb.	[kg]
PH12	Ped, hanging file	13 5/8	346	15	381	18	457	28	12.7
PH1212	Ped, hanging file/file	25 5/8	651	15	381	18	457	49	22.2
PH612	Ped, hanging box/file	19 5/8	498	15	381	18	457	41	18.6
PH6612	Ped, hanging box/box/file	25 5/8	651	15	381	18	457	53	24.0
PH6	Ped, hanging box	7 5/8	194	15	381	18	457	22	10.0
PH66	Ped, hanging box/box	13 5/8	346	15	381	18	457	33	15.0
PH666	Ped, hanging box/box/box	19 5/8	498	15	381	18	457	45	20.4
PH6666	Ped, hanging box/box/box/box	25 5/8	651	15	381	18	457	55	24.9
PMD1212	Mobile ped, file/file	27 1/3	694	15	381	22	559	84	38.1
PMD612	Mobile ped, box/file	22 3/8	568	15	381	22	559	70	31.8
PMD6612	Mobile ped, box/box/file	27 1/3	694	15	381	22	559	84	38.1
PMD666	Mobile ped, box/box/box	22 3/8	568	15	381	22	559	75	34.0
PMD6666	Mobile ped, box/box/box/box	27 1/3	694	15	381	22	559	86	39.0

Rev 01/16/20

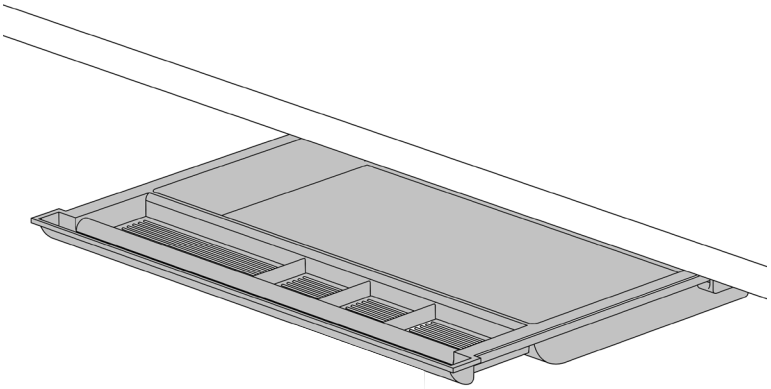

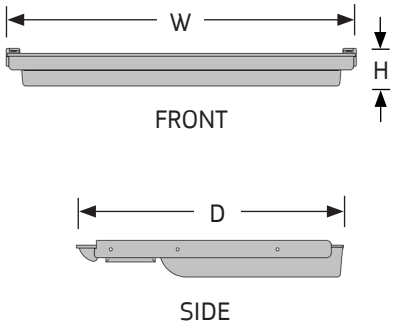

PENCIL DRAWER

- Black plastic drawers provide storage for pencils, pens, office accessories and other small items.
- Drawers mount under Ultra, Work and Peninsula Surfaces.
- Load capacity 25 lbs.

NOTES

» Surfaces are not predrilled for Pencil Drawers.

How to Specify

Step 1. Product Number

PD2015BK

Product Number	Description	Height		Width		Depth		Weight	
		in.	[mm]	in.	[mm]	in.	[mm]	lb.	[kg]
PD2015BK	Pencil drawer	2 ⅛	54	21 ⅛	537	16 ¼	413	5	2.3

Rev 07/29/14

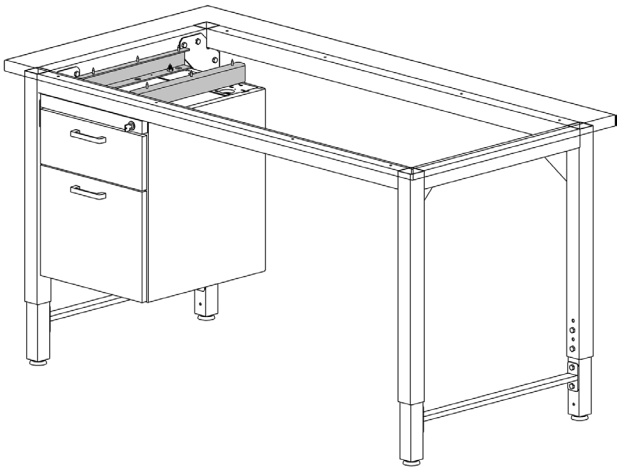

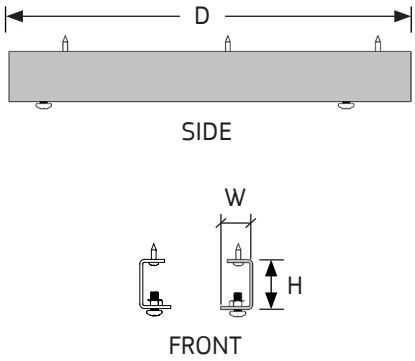

ACCESSORY MOUNTING BRACKETS

- Accessory Mounting Brackets suspend a Pencil Drawer, Tote Bearer or Hanging Pedestal from the underside of a 4-Legged Table.
- Brackets mount to the bottom of the surface with screws provided in the Accessory Mounting Bracket hardware pack.
- Load capacity 150 lbs.
- Finish is black.

NOTES

» Works on all table depths with Peds, Tote Bearers and Pencil Drawers.

How to Specify

Step 1. Product Number

ASMBBK

Product Number	Description	Height		Width		Depth		Weight	
		in.	[mm]	in.	[mm]	in.	[mm]	lb.	[kg]
ASMBBK	Accessory mounting brackets	2	51	1 ¼	32	16	406	5	2.3

Rev 08/19/14

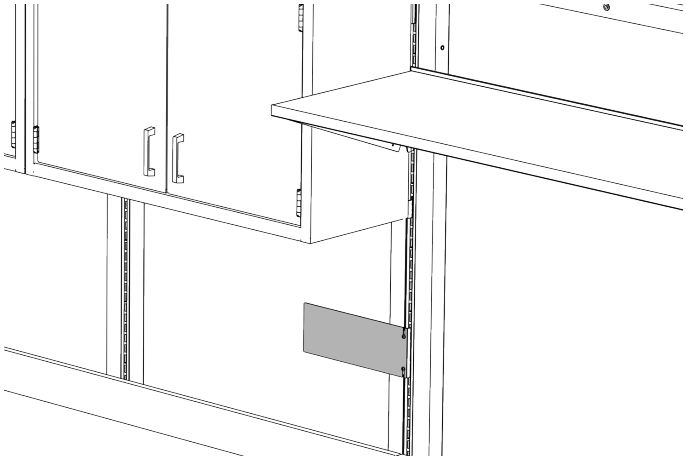

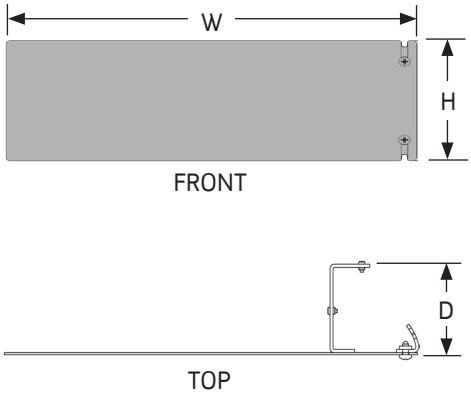

UTILITY DISPENSER MOUNTING BRACKET

- Utility Dispenser Mounting Bracket provides a secure means of mounting a variety of dispensers or accessory items.
- Dispensers or accessory items may be tek-screwed, hung from the lip or mounted with double-sided tape (not provided).
- Load capacity 20 lbs.

How to Specify

Step 1. Product Number

UDMB

Step 2. Paint Color Code

AW	Arctic White	**GL**	Grey Light Smooth
AS	Argent Silver	**GT**	Grey Light Texture
BK	Black	**NW**	Neutral White
BT	Black Texture	**ST**	Sand Texture

Product Number	Description	Height		Width		Depth		Weight	
		in.	[mm]	in.	[mm]	in.	[mm]	lb.	[kg]
UDMB	Utility dispenser mounting bracket	4 ¾	121	12 ¾	324	2 ½	64	2	0.9

Rev 04/01/19

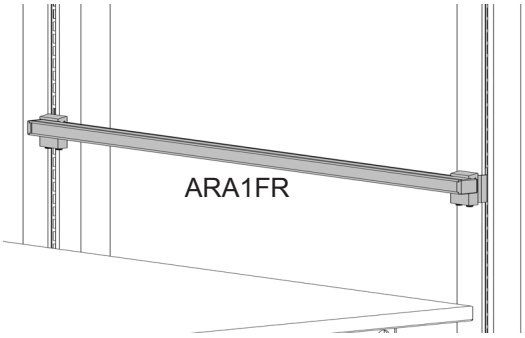

UltraFrame and Ergostat Riser Frame

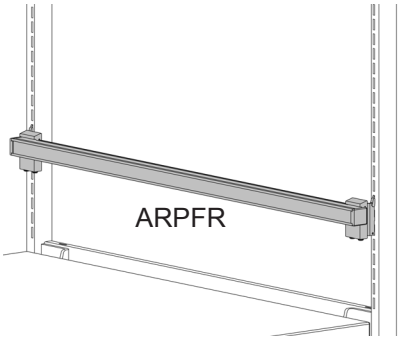

Ergostat Pro Riser Frame

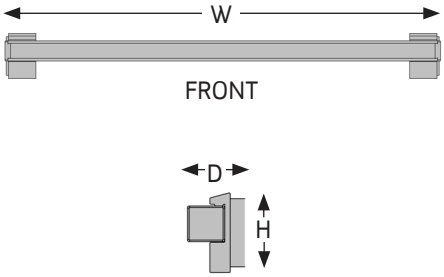

SIDE

ACCESSORY RAILS

- Accessory Rails mount to Ultra Frames, Ergostat and ErgostatPro Riser Frames or directly to a building wall.
- Provides attachment for Accessory Rail Tools.
- The Rail and brackets are aluminum and the laminate inlay and caps are coordinating gray.
- Load capacity is 20 lbs. per linear foot.

NOTES

» The wall version includes the rail only and mounts directly to the wall.
» Accessory Rail Tools sold separately; see pages 7.11-7.15.

How to Specify

Step 1. Product Number

ARA1FR UltraFrame & ErgoStat Riser Frame
ARPFR ErgoStat Pro Riser Frame
ARWR Wall Mounted

Step 2. Width

24 24" wide **30** 30" wide **36** 36" wide
48 48" wide **60** 60" wide **72** 72" wide

Product Number	Description	Height		Width		Depth		Weight	
		in.	[mm]	in.	[mm]	in.	[mm]	lb.	[kg]
ARA1FR24	Accessory Rail for Ultra Frame / Ergostat Riser 24W	2 5/8	65	23 7/8	608	1 3/8	35	2	1
ARA1FR30	Accessory Rail for Ultra Frame / Ergostat Riser 30W	2 5/8	65	29 7/8	760	1 3/8	35	2 1/2	1
ARA1FR36	Accessory Rail for Ultra Frame / Ergostat Riser 36W	2 5/8	65	35 7/8	913	1 3/8	35	3	1
ARA1FR48	Accessory Rail for Ultra Frame / Ergostat Riser 48W	2 5/8	65	47 7/8	1218	1 3/8	35	4	2
ARA1FR60	Accessory Rail for Ultra Frame / Ergostat Riser 60W	2 5/8	65	59 7/8	1522	1 3/8	35	5	2
ARA1FR72	Accessory Rail for Ultra Frame / Ergostat Riser 72W	2 5/8	65	71 7/8	1827	1 3/8	35	6	3
ARPFR24F	Accessory Rail for Ergostat Pro Riser 24W	2 5/8	65	23 7/8	608	1 3/8	35	2	1
ARPFR30F	Accessory Rail for Ergostat Pro Riser 30W	2 5/8	65	29 7/8	760	1 3/8	35	2 1/2	1
ARPFR36F	Accessory Rail for Ergostat Pro Riser 36W	2 5/8	65	35 7/8	913	1 3/8	35	3	1
ARPFR48F	Accessory Rail for Ergostat Pro Riser 48W	2 5/8	65	47 7/8	1218	1 3/8	35	4	2
ARPFR60F	Accessory Rail for Ergostat Pro Riser 60W	2 5/8	65	59 7/8	1522	1 3/8	35	5	2
ARPFR72F	Accessory Rail for Ergostat Pro Riser 72W	2 5/8	65	71 7/8	1827	1 3/8	35	6	3
ARWR24	Accessory Rail for Wall Mount Rail 24W	1 1/8	29	23 7/8	608	1 1/4	30	2	1
ARWR30	Accessory Rail for Wall Mount Rail 30W	1 1/8	29	29 7/8	760	1 1/4	30	2	1
ARWR36	Accessory Rail for Wall Mount Rail 36W	1 1/8	29	35 7/8	913	1 1/4	30	3	1
ARWR48	Accessory Rail for Wall Mount Rail 48W	1 1/8	29	47 7/8	1218	1 1/4	30	4	2
ARWR60	Accessory Rail for Wall Mount Rail 60W	1 1/8	29	59 7/8	1522	1 1/4	30	4	2
ARWR72	Accessory Rail for Wall Mount Rail 72W	1 1/8	29	71 7/8	1827	1 1/4	30	5	2

Rev 05/16/25

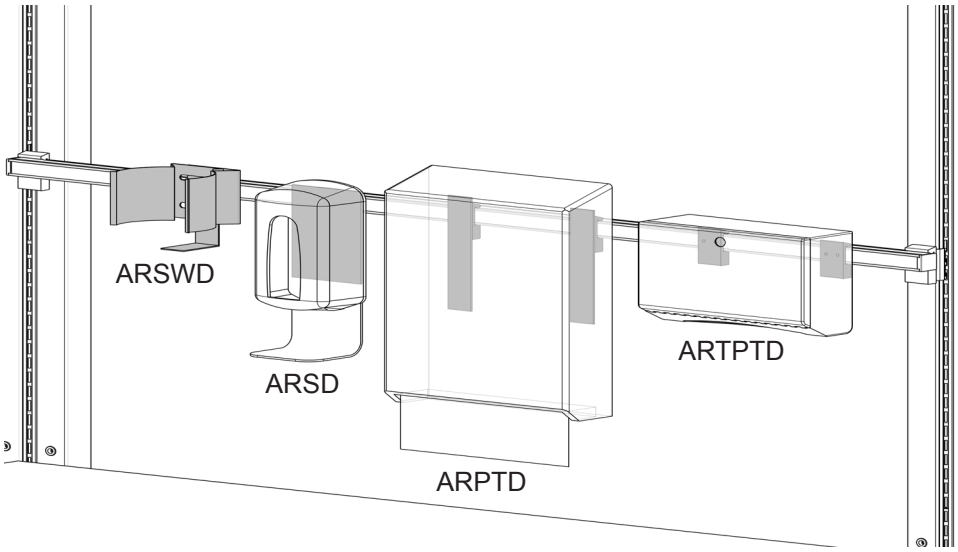

ACCESSORY RAIL DISPENSER BRACKETRY

ARPTD
- Universal Mounting Plates for most owner provided paper towel holders with slotted mounts on the back.

ARSD
- Universal Mounting Plate for most owner provided wide-body soap and sanitize dispensers.

ARTPTD
- Universal Mounting Plate for owner provided half-size trifold paper towel dispensers.

ARSWD
- Universal Mounting Plate with adjustable holder for most brands of sanitizing wipes.

NOTES
» This bracketry is a two piece design consisting of an aluminum adapter that attaches to the rail, and a white powder coated plate/holder that supports the dispenser. Hardware is included.

» The Dispenser Brackets on this page are attached to the Accessory Rails sold separately; see page 7.10. Please contact Symbiote to confirm what owner provided items will fit on these brackets.

How to Specify

Step 1. Product Number

ARPTD
ARSD
ARTPTD
ARSWD

Product Number	Description	Height		Width		Depth		Weight	
		in.	[mm]	in.	[mm]	in.	[mm]	lb.	[kg]
ARPTD	Paper Towel Dispenser Bracket for Accessory Rail	8	203	1 ½	38	¾	19	1	½
ARSD	Soap / Sanitizer Dispenser Bracket for Accessory Rail	7 ½	191	4 ½	114	¾	19	1	½
ARTPTD	Half Size Trifold Paper Towel Dispenser Bracket for Accessory Rail	2 ½	64	1 ½	38	¾	19	1	½
ARSWD	Sanitizing Wipe adjustable Bracket for Accessory Rail	6	152	½	127	5	127	2	1

Rev 05/16/25

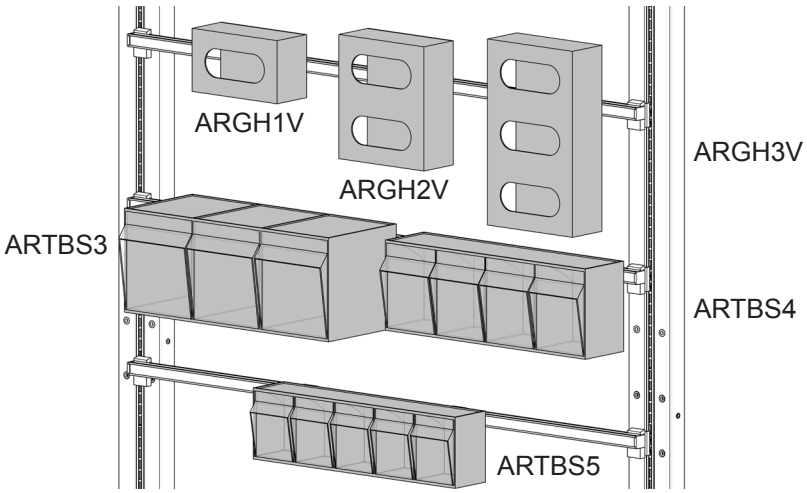

ACCESSORY RAIL BOXES AND BINS

Glove Box Holders

- Provides side, slide in loading of glove boxes and or other PPE.
- The holder is made of heavy-duty acrylic.

ARGH1H Glove Box Holder One Box Horizontal
ARGH2H Glove Box Holder Two Box Horizontal
ARGH3H Glove Box Holder Three Box Horizontal
ARGH1V Glove Box Holder One Box Vertical (shown above)
ARGH2V Glove Box Holder Two Box Vertical (shown above)
ARGH3V Glove Box Holder Three Box Vertical (shown above)

Tilt Out Bins

- Provides easy access to contents stored in the bin.
- The outside of the bin is white with clear plastic bins so you can see the contents of each bin.

ARTBS3 Tilt Out Bins - 3 bins
ARTBS4 Tilt Out Bins - 4 bins
ARTBS5 Tilt Out Bins - 5 bins

NOTES

» The inside dimension of each glove holder compartment is 5.375" x 9.75" x 3.75"d.
» The Bins and Boxes on this page include the box/bin and brackets to attach to the Accessory Rails, sold separately; see page 7.10.

How to Specify

Step 1. Product Number

ARGH1H
ARGH2H
ARGH3H
ARGH1V
ARGH2V
ARGH3V
ARTBS3
ARTBS4
ARTBS5

Product Number	Description	Height		Width		Depth		Weight	
		in.	[mm]	in.	[mm]	in.	[mm]	lb.	[kg]
ARGH1H	Glove Holder One Box Horizontal for Accessory Rail	10	254	5 ¾	146	5	127	1	½
ARGH2H	Glove Holder Two Box Horizontal for Accessory Rail	10	254	11 ⅜	289	5	127	2	1
ARGH3H	Glove Holder Three Box Horizontal for Accessory Rail	10	254	18 ¾	476	5	127	3	1 ½
ARGH1V	Glove Holder One Box Vertical for Accessory Rail	5 ¾	146	10	254	5	127	1	½
ARGH2V	Glove Holder Two Box Vertical for Accessory Rail	11 ⅜	289	10	254	5	127	2	1
ARGH3V	Glove Holder Three Box Vertical for Accessory Rail	18 ¾	476	10	254	5	127	3	1 ½
ARTBS3	Tilt Out Bin Rail - 3 bins for Accessory Rail	9 ½	241	24	610	9 ½	241	3	1 ½
ARTBS4	Tilt Out Bin Rail - 4 bins for Accessory Rail	8 ¼	210	23 ½	597	5 ½	140	4	2
ARTBS5	Tilt Out Bin Rail - 5 bins for Accessory Rail	6 ½	165	23 ¾	603	4 ¼	108	4	2

Rev 05/16/25

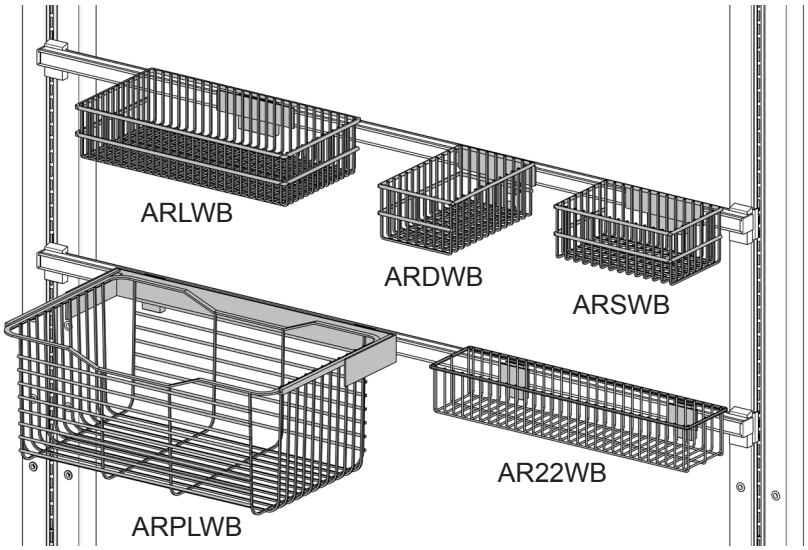

ACCESSORY RAILS BASKETS

ARLWB Large Wire Baskets for Accessory Rail (load capacity 10 lbs.)
ARDWB Deeper Wire Basket (load capacity 5 lbs.)
ARSWB Wider Wire Basket (load capacity 5 lbs.)
ARPLWB Pull Out Wire Basket (load capacity 10 lbs.)
AR22WB Wide Wire Baskets (load capacity 10 lbs.)

NOTES

» The Baskets are coated in a white plastic.
» The Wire Baskets on this page are designed to attach to the Accessory Rails sold separately; see page 7.10.

How to Specify

Step 1. Product Number

ARLWB
ARDWB
ARSWB
ARPLWB
AR22WB

Product Number	Description	Height		Width		Depth		Weight	
		in.	[mm]	in.	[mm]	in.	[mm]	lb.	[kg]
ARLWB	Large Wire Baskets for Accessory Rail	4	102	18	457	10	254	4	2
ARDWB	Deeper Wire Basket (load capacity 5 lbs.)	4 ¼	108	7	178	10	254	3	1 ½
ARSWB	Wider Wire Basket (load capacity 5 lbs.)	4 ¼	108	10	254	7	178	3	1 ½
ARPLWB	Pull-out Wire Basket for Accessory Rail	10	254	23	584	15 ½	394	6	3
AR22WB	22" Wide Wire Basket for Accessory Rail	3 ½	89	22	559	5	127	4	2

Rev 05/16/25

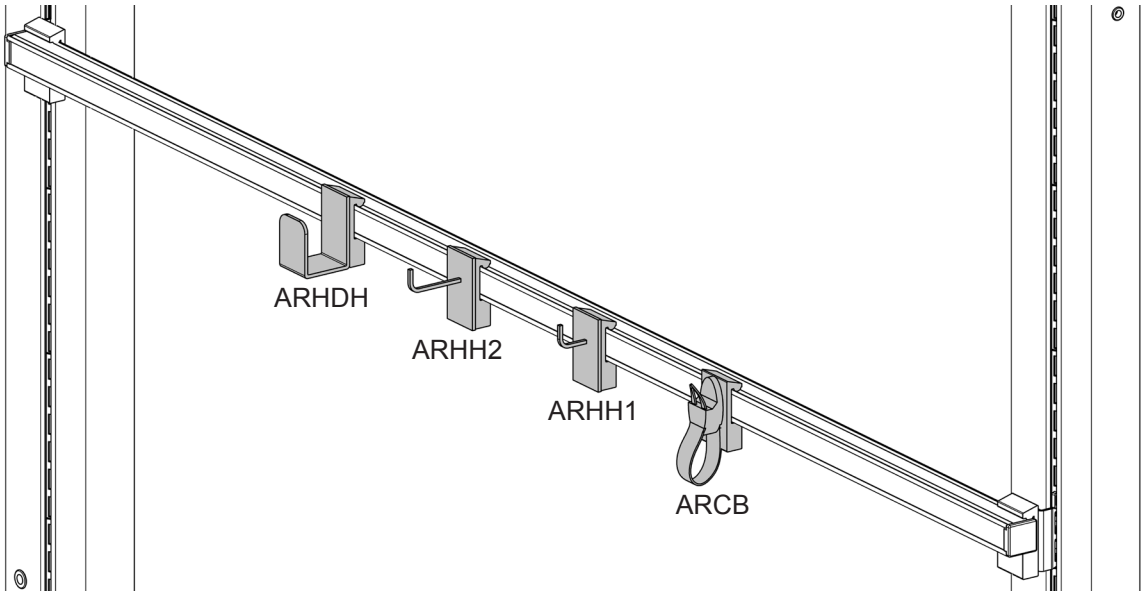

ACCESSORY RAILS HOOKS

ARHDH	Heavy Duty U-hook
ARHH1	Metal Wire Hook, 1"
ARHH2	Metal Wire Hook, 2"
ARCB	Cord Bundler with ABS antimicrobial plastic adapter, slide action loop and clip to hold wires or cords

NOTES

» The Hooks on this page attach to the Accessory Rails sold separately; see page 7.10.

How to Specify

Step 1. Product Number

ARHDH
ARHH1
ARHH2
ARCB

Product Number	Description	Height		Width		Depth		Weight	
		in.	[mm]	in.	[mm]	in.	[mm]	lb.	[kg]
ARHDH	Heavy Duty Hook for Accessory Rail	1 ½	38	1 ½	38	1 ¾	44	½	¼
ARHH1	One Inch Hook for Accessory Rail	2 ½	64	1 ½	38	1	25	1	½
ARHH2	Two Inch Hook for Accessory Rail	2 ½	64	1 ½	38	2	51	1	½
ARCB	Cord Bundler for Accessory Rail	3 ½	89	1 ½	38	¾	19	½	¼

Rev 05/16/25

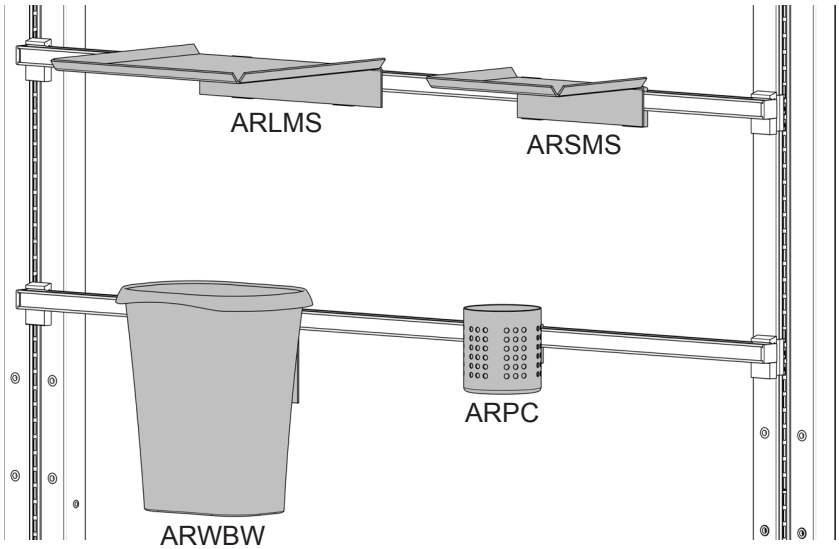

ACCESSORY RAIL SHELVES AND ORGANIZATIONAL TOOLS

ARSMS Small Shelf. Metal with antimicrobial (AMF) powder coat painted finish, includes 0.75" lip on 3 sides

ARLMS Large Shelf. Metal with antimicrobial (AMF) powder coat painted finish, includes 0.75" lip on 3 sides

ARWBW Waste Basket. Mounting Plate with 12 qt. Rubbermaid waste basket

ARPC Pen Cup, White Powder Coated

NOTES

» The Shelves and Organizational Tools on this page attach to the Accessory Rails sold separately; see page 7.10.

How to Specify

Step 1. Product Number

ARSMS
ARLMS
ARWBW
ARPC

Product Number	Description	Height		Width		Depth		Weight	
		in.	[mm]	in.	[mm]	in.	[mm]	lb.	[kg]
ARSMS	Small Shelf for Accessory Rail	¾	19	10	254	8	203	3	1 ½
ARLMS	Large Shelf for Accessory Rail	¾	19	14 ½	368	13 ½	343	4	2
ARWBW	Waste Basket for Accessory Rail	13 ½	343	12 ¼	311	9 ¼	235	2	1
ARPC	Pen Cup for Accessory Rail	4 ¾	121			5 ⅜	137	1 ½	¾

Rev 05/16/25

ELECTRICAL AND AIR

Plug Strips 8.2
Electrical Outlet Strips 8.3
Utility Mounting Brackets 8.4
Power Distribution Rail 8.5
LED Lights 8.6
General LED Task Lights 8.7
LED Magnification Light 8.8
LED High Performance Task Lights 8.9
Cantilever Light Brackets 8.10
Shelf Mount Light Brackets 8.11
Electrical Distributors, Inset-Mount 8.12
Electrical Distributor Covers, Inset-Mount 8.13
Electrical Distributors, Face-Mount 8.14
Electrical Distributor Covers, Face-Mount 8.15
Electrical Distributor Power Cables 8.16
Electrical Distributor Receptacles 8.17
Data Distributors, Face-Mount 8.18
Data Dist. Routers/End Covers, Face-Mount 8.19
Data Distributors, Inset-Mount 8.20
Data Dist. Routers/End Covers, Inset-Mount 8.21
Vertical Distributors 8.22
Air Strips 8.23
Compressed Air Accessories 8.24
Air Brackets, Surface-Mount 8.25

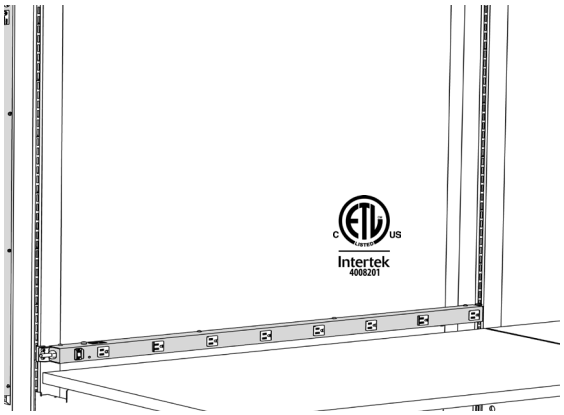

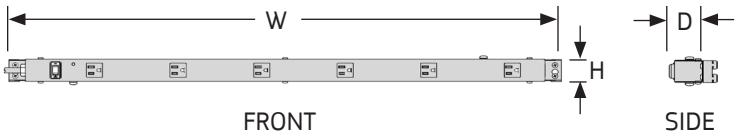

PLUG STRIPS

- Plug Strips provide single circuit, 15 Amp or 20 Amp, 110 Volt outlets where needed on frames.
- Each strip includes NEMA configuration 5-15R/5-20R black simplex receptacles and a 5-15P/5-20P plug.
- Strips mount horizontally to frames on hanger clips.
- Each strip includes a lighted, rocker-actuated circuit breaker with a built-in safety guard and an 8' power cord.
- One threaded insert located on each end of the Plug Strip allows for the grounding of dissipative workstation components.
- 15 Amp Plug Strips conform to ANSI/UL std.1363 and CSA C22.2 No.308.

NOTES

» A 36" long plug strip may be mounted vertically inside the ErgoStat Riser Frame.
» A 48" long plug strip can be mounted vertically inside an 80" high Ultra Frame.
» Power cords exit the end of each strip where the switch is located.
» 20 Amp Plug Strips will not plug into 15 Amp Plug Strips.
» 15 and 20 Amp Plug Strips are available with NEMA L5-15P and L5-20P twist lock plugs; consult factory.

How to Specify

Step 1. Product Number

EPS Plug Strip, 15 Amp
EP20 Plug Strip, 20 Amp

Step 2. Width

24 24" wide **30** 30" wide **36** 36" wide
48 48" wide **60** 60" wide **72** 72" wide

Step 3. Paint Color Code

AW Arctic White **GL** Grey Light Smooth
AS Argent Silver **GT** Grey Light Texture
BK Black **NW** Neutral White
BT Black Texture **ST** Sand Texture

Product Number	Description	Height		Width		Depth		Weight	
		in.	[mm]	in.	[mm]	in.	[mm]	lb.	[kg]
EPS24	15 Amp, 6 outlets	2	51	24	610	2	51	3	1.4
EPS30	15 Amp, 7 outlets	2	51	30	762	2	51	4	1.8
EPS36	15 Amp, 8 outlets	2	51	36	914	2	51	5	2.3
EPS48	15 Amp, 10 outlets	2	51	48	1219	2	51	6	2.7
EPS60	15 Amp, 12 outlets	2	51	60	1524	2	51	7	3.2
EPS72	15 Amp, 15 outlets	2	51	72	1829	2	51	9	4.1
EP2024	20 Amp, 6 outlets	2	51	24	610	2	51	3	1.4
EP2030	20 Amp, 7 outlets	2	51	30	762	2	51	4	1.8
EP2036	20 Amp, 8 outlets	2	51	36	914	2	51	5	2.3
EP2048	20 Amp, 10 outlets	2	51	48	1219	2	51	6	2.7
EP2060	20 Amp, 12 outlets	2	51	60	1524	2	51	7	3.2
EP2072	20 Amp, 15 outlets	2	51	72	1829	2	51	9	4.1

Rev 06/10/24

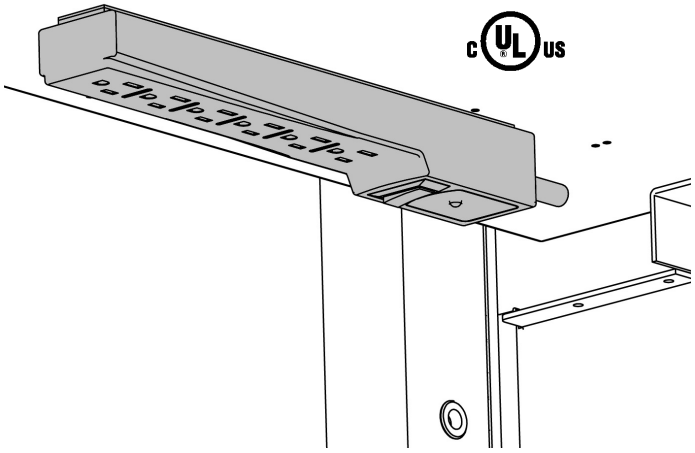

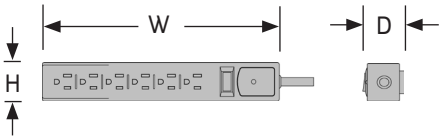

ELECTRICAL OUTLET STRIPS

- Strips provide six 15 Amp, 120 Volt outlets where needed.
- Each strip includes a lighted on/off switch with integrated circuit breaker, 6' power cord and hook and loop strips for mounting to any flat surface.
- EMI/RFI noise filtering.
- 15 Amp Outlet Strips are UL listed.
- Surge suppression rating: 790 Joules.
- Finish is black.

How to Specify

Step 1. Product Number

EOS6BK

Product Number	Description	Height		Width		Depth		Weight	
		in.	[mm]	in.	[mm]	in.	[mm]	lb.	[kg]
EOS6BK	Outlet strip	1 ⅝	41	10 ¼	260	1 ½	38	2	0.9

Rev 08/11/11

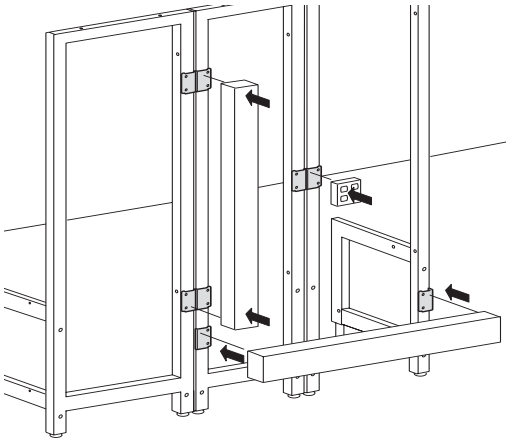

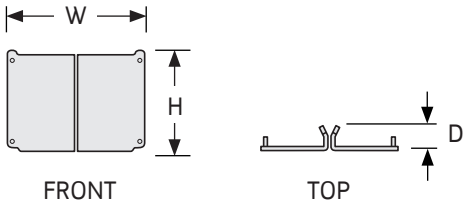

UTILITY MOUNTING BRACKETS

- Sold in pairs, Utility Mounting Brackets provide easy adaptability to Symbiote stations for junction boxes and vertical and horizontal mounting of standard Wiremold®, without defacing the framework.
- Steel brackets have a solid face on which to mount electrical product with self drilling screws. Integral clips hang in 1" increments on frames.
- Brackets mount adjacent to each other at the juncture of two frames providing flat stationary surfaces on which to mount vertical electrical product and junction boxes with self drilling screws.
- Brackets also mount opposite each other on frames providing flat surfaces on which to mount horizontal electrical product with self drilling screws.
- Finish is Black.

NOTES

» Junction box and horizontal mounting requires one pair of brackets; vertical mounting requires two pairs.

How to Specify

Step 1. Product Number

UMBBK

Product Number	Description	Height		Width		Depth		Weight	
		in.	[mm]	in.	[mm]	in.	[mm]	lb.	[kg]
UMBBK	Utility brackets	4 5/8	117	4 3/4	121	1 1/3	34	2	0.9

Rev 01/29/09

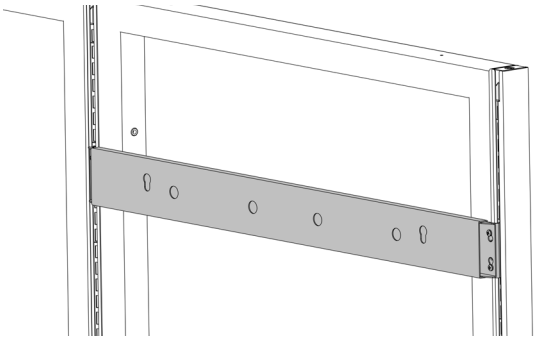

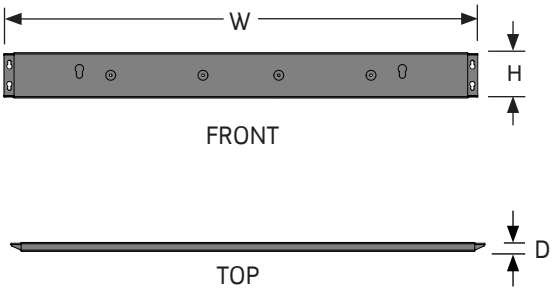

POWER DISTRIBUTION RAIL

- Power Distribution Rails allows for mounting of customer supplied power distribution units (PDU's).
- Keyhole spacing for mounting of PDU is based on 12.25" module, center-to-center, or 7 EIA units. (1.750" per unit).
- Includes thru-holes for optional switch mounting plate.
- Load capacity is 25 lbs. per rail.

NOTES

» Power distribution units not included.

How to Specify

Step 1. Product Number

PDR Power Distribution Rail

Step 2. Width

36 36" wide **48** 48" wide **60** 60" wide
72 72" wide **96** 96" wide

Step 3. Paint Color Code

AW Arctic White
AS Argent Silver
BK Black
BT Black Texture
GL Grey Light Smooth
GT Grey Light Texture
NW Neutral White
ST Sand Texture

Product Number	Description	Height		Width		Depth		Weight	
		in.	[mm]	in.	[mm]	in.	[mm]	lb.	[kg]
PDR36	Power Distribution Rail	3 2/5	87	36	913	2/3	17	5	2.4
PDR48	Power Distribution Rail	3 2/5	87	48	1218	2/3	17	7	3.3
PDR60	Power Distribution Rail	3 2/5	87	60	1522	2/3	17	9	4.1
PDR72	Power Distribution Rail	3 2/5	87	72	1827	2/3	17	11	5
PDR96	Power Distribution Rail	3 2/5	87	96	2437	2/3	17	15	6.6

Rev 02/26/25

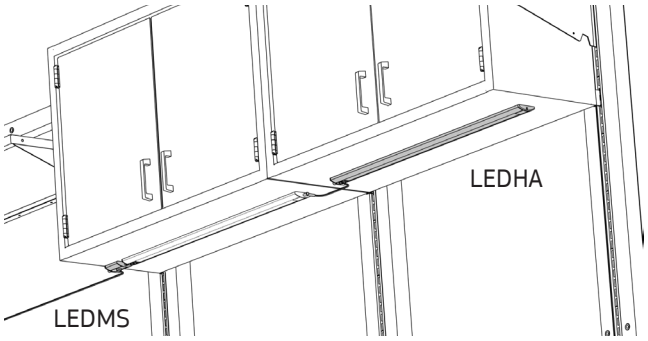

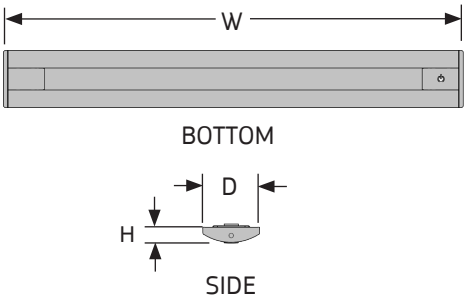

LED LIGHTS

High Output LED Lights

- High output LED lighting provides high efficiency lighting for general tasks. 3500K temperature, 84CRI and 50,000 hour life span.
- Touch-and-hold continuous dimming with 10 hour automatic shut off.
- Starter kits include one 60W Power Supply with 12' cord.
- Adder kits include the light, (1) 8" and (1) 30" length jumper; Power Supply not included.
- Color is clear anodized aluminum housing with white end caps.

Occupancy Sensor

- Passive infrared (PIR) integrated occupancy sensor automatically turns off all interconnected fixtures after 30 minutes of no movement detection.

NOTES

» Includes screw and pivoting magnetic mounting kit complete with adhesive cord managers.
» Additional jumpers sold separately.
» End-to-end connectors can be used between lights in place of a jumper.
» Recommended shelf sizes are:
17" LED Light - 24", 30" and 36"
31" LED Light - 48" and larger
44" LED Light - 60" and larger
58" LED Light - 72"

How to Specify

Step 1. Product Number

LEDHS LED Light, Starter Unit
LEDHA LED Light, Adder Unit

Step 2. Width

17 17" wide **31** 31" wide **44** 44" wide
58 58" wide

Step 3. Color (Lights only)

SVW Silver with White

Interconnected LED light fixtures must not exceed 60W. Layout combinations include:

17" LED	31" LED	44" LED	58" LED
QTY	QTY	QTY	QTY
4	0	0	0
3	0	0	0
2	1	0	0
1	1	0	0
1	0	1	0
0	2	0	0
0	0	1	0
0	0	0	1

Product Number	Description	Height		Width		Depth		Weight	
		in.	[mm]	in.	[mm]	in.	[mm]	lb.	[kg]
LEDHS17SVW	Starter unit (736 lumens, 10.2 watts)	½	13	16 ½	419	2	51	1 ¼	0.6
LEDHS31SVW	Starter unit (1438 lumens, 19.8 watts)	½	13	30 ⅛	765	2	51	1 ¾	0.8
LEDHS44SVW	Starter unit (2073 lumens, 28.1 watts)	½	13	43 ¾	1111	2	51	2 ¼	1.0
LEDHS58SVW	Starter unit (2755 lumens, 38.3 watts)	½	13	57 ½	1461	2	51	2 ¾	1.2
LEDHA17SVW	Adder unit (736 lumens, 9.5 watts)	½	13	16 ½	419	2	51	1 ¼	0.6
LEDHA31SVW	Adder unit (1438 lumens, 17.3 watts)	½	13	30 ⅛	765	2	51	1 ¾	0.8
LEDHA44SVW	Adder unit (2073 lumens, 25.5 watts)	½	13	43 ¾	1111	2	51	2 ¼	1.0
LEDMS	Motion sensor	½	13	2	51	2	51	1	0.5
LEDEC	End-to-end connector	½	13	2	51	2	51	¼	0.1
LEDP60	60 watt power supply	½	13	4 ½	114	2	51	1	0.5
LEDJ08	8" jumper (interconnect cord)	½	13	8	203	2	51	¼	0.1
LEDJ30	30" jumper (interconnect cord)	½	13	30	762	2	51	¼	0.1
LEDJ54	54" jumper (interconnect cord)	½	13	54	1372	2	51	¼	0.1

Rev 03/12/26

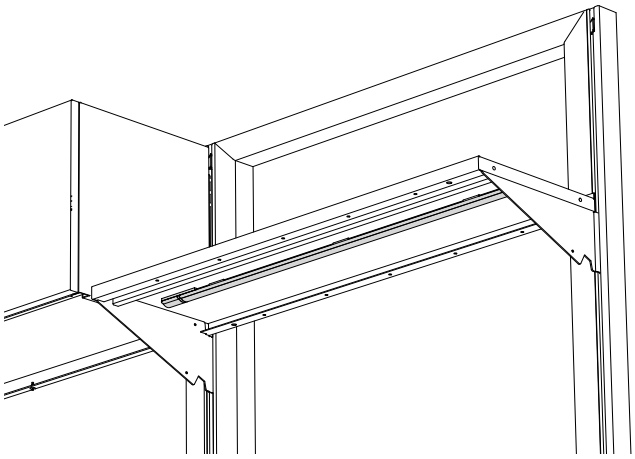

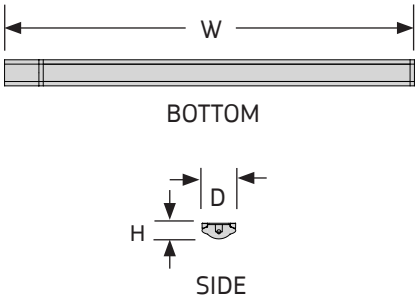

GENERAL LED TASK LIGHTS

- General LED Task Lights provide illumination where needed with a lifespan of 52,000 hours and a 3500k color temperature.
- Light features touch pad dimming with last state memory to further adjust light intensity and automatic shut off.
- Low profile design mounts with magnets under Multi-function, Storage, Center and Bookend Shelves, plus Storage Cabinets, in the flat position.
- Color is silver with black end caps.

NOTES

» Does not mount to Cantilever or Shelf Mount Light Brackets.

How to Specify

Step 1. Product Number

LEDTG

Step 2. Width

17 17" wide **31** 31" wide **44** 44" wide

Step 3. Color

SVB Silver with Black

Product Number	Description	Height		Width		Depth		Weight	
		in.	[mm]	in.	[mm]	in.	[mm]	lb.	[kg]
LEDTG17SVB	LED task light (510 lumens, 6.3 watts)	½	13	18 ⅝	473	1 ¼	32	5	2.3
LEDTG31SVB	LED task light (961 lumens, 11.8 watts)	½	13	32 ⅝	829	1 ¼	32	7	3.2
LEDTG44SVB	LED task light (1313 lumens, 16.2 watts)	½	13	45 ⅝	1159	1 ¼	32	9	4.1

Rev 03/12/26

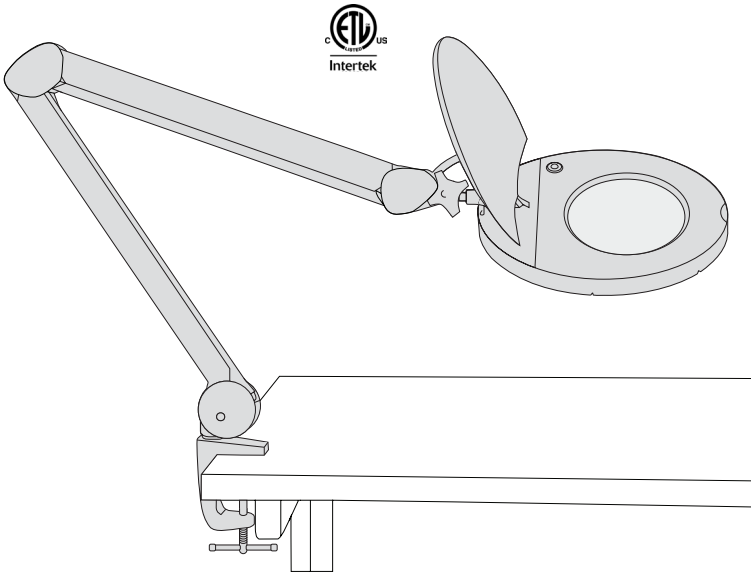

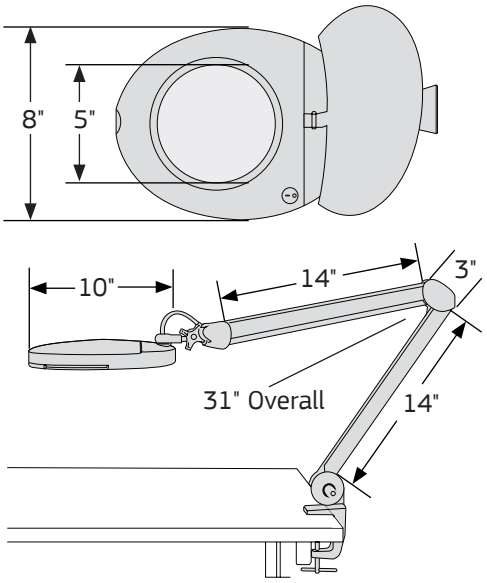

LED MAGNIFICATION LIGHT

- Double-arm adjustable light with a 3-diopter magnification lens providing 1.75x magnification.
- 10" shade houses 80 Ultra Efficient LEDS with an illuminance of 1860 Lux and a CCT of 6500K.
- Clamps to edge of a surface.
- ETL Certified.
- Color is white.

How to Specify

Step 1. Product Number

ML180W

Product Number	Description	Height		Width		Depth		Weight	
		in.	[mm]	in.	[mm]	in.	[mm]	lb.	[kg]
ML180W	LED magnification light	31	787	8	203	10	254	8	3.6

Rev 07/07/26

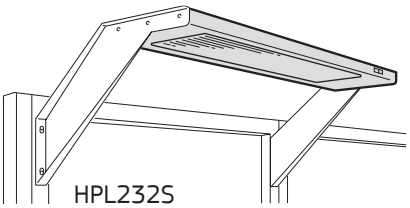
HPL232S

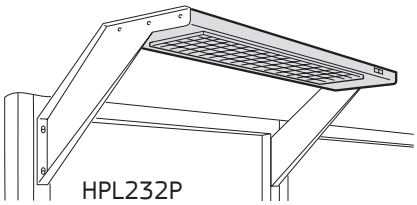
HPL232P

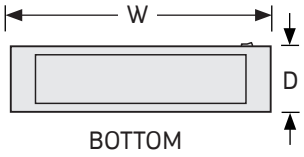

BOTTOM

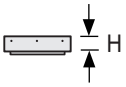

SIDE

LED HIGH PERFORMANCE TASK LIGHTS

- LED Lights provide illumination for assembly tasks.
- Lights mount under shelves with Shelf Mount Light Brackets or to frames with Cantilever Light Brackets.
- Lights include premium glass tube LED lamps and a 9' cord with rear right-hand exit.
- Lights are available with batwing or glare reducing parabolic lenses and with two or four lamps.
- Four lamp fixtures have two switches allowing two or four lamps to be lit.
- Color temperature 4100k.

NOTES

» Mounting brackets sold separately; see pages 8.9 - 8.10.
» Lights are available for UK applications with a BS 1363A plug.
» Lights are available for EU applications with a CEE 7/7 "Schuko" plug.
» To order United Kingdom or European Task Lights, consult factory.

How to Specify

Step 1. Product Number

HPL2 LED Task Light, 2 lamp
HPL4 LED Task Light, 4 lamp

Step 2. Width

32 32" wide **44** 44" wide **56** 56" wide
68 68" wide

Step 3. Lens

S Batwing **P** Parabolic

Step 4. Paint Color Code

AW Arctic White
AS Argent Silver
BK Black
BT Black Texture
GL Grey Light Smooth
GT Grey Light Texture
NW Neutral White
ST Sand Texture

Product Number	Description	Height		Width		Depth		Weight	
		in.	[mm]	in.	[mm]	in.	[mm]	lb.	[kg]
HPL232S	2 lamp, batwing	2	51	32	813	11	279	20	9.1
HPL232P	2 lamp, parabolic	2	51	32	813	11	279	20	9.1
HPL244S	2 lamp, batwing	2	51	44	1118	11	279	25	11.3
HPL244P	2 lamp, parabolic	2	51	44	1118	11	279	25	11.3
HPL256S	2 lamp, batwing	2	51	56	1422	11	279	30	13.6
HPL256P	2 lamp, parabolic	2	51	56	1422	11	279	30	13.6
HPL268S	2 lamp, batwing	2	51	68	1727	11	279	33	15.0
HPL268P	2 lamp, parabolic	2	51	68	1727	11	279	33	15.0
HPL432S	4 lamp, batwing	2	51	32	813	11	279	20	9.1
HPL432P	4 lamp, parabolic	2	51	32	813	11	279	20	9.1
HPL444S	4 lamp, batwing	2	51	44	1118	11	279	25	11.3
HPL444P	4 lamp, parabolic	2	51	44	1118	11	279	25	11.3
HPL456S	4 lamp, batwing	2	51	56	1422	11	279	30	13.6
HPL456P	4 lamp, parabolic	2	51	56	1422	11	279	30	13.6
HPL468S	4 lamp, batwing	2	51	68	1727	11	279	33	15.0
HPL468P	4 lamp, parabolic	2	51	68	1727	11	279	33	15.0

Rev 04/01/19

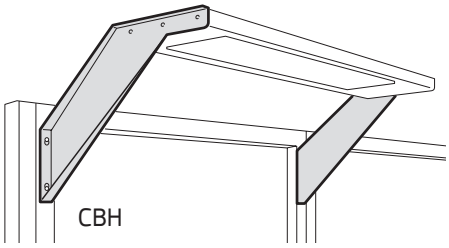

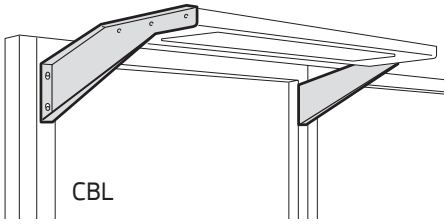

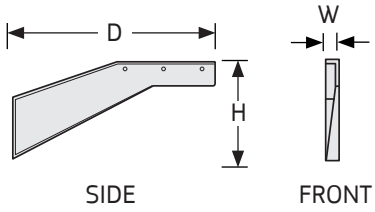

CANTILEVER LIGHT BRACKETS

- Sold in pairs, Cantilever Light Brackets provide overhead frame-mounted support for High Performance Task Lights and Overhead Tool Travelers.
- Low profile brackets mount flush with the top of frames when mounted in their highest position.
- High profile brackets extend 7½" above frames when mounted in their highest position.

NOTES

» Use extended brackets when shelves 15" deep or greater are mounted below lights.

» LED High Performance Task Lights and Tool Travelers sold separately; see pages 8.8 and 12.13.

» General LED Task Lights do not mount to Cantilever Light Brackets.

» Cantilever Light Brackets allow lights to span between two adjacent frames that are connected by a Panel Connector as well as mount to individual frames.

How to Specify

Step 1. Product Number

CBL	Light Bracket, low profile
CBL30	Light Bracket, low profile, extended
CBH	Light Bracket, high profile
CBH30	Light Bracket, high profile, extended

Step 2. Paint Color Code

STANDARD

AW	Arctic White	**GL**	Grey Light Smooth
AS	Argent Silver	**GT**	Grey Light Texture
BK	Black	**NW**	Neutral White
BT	Black Texture	**ST**	Sand Texture

Product Number	Description	Height		Width		Depth		Weight	
		in.	[mm]	in.	[mm]	in.	[mm]	lb.	[kg]
CBL	Low profile, pair	7 ½	191	2	51	20 ½	521	7	3.2
CBL30	Low profile extended, pair	7 ½	191	2	51	30 ½	775	10	4.5
CBH	High profile, pair	17 ¼	438	2	51	20 ½	521	10	4.5
CBH30	High profile extended, pair	17 ¼	438	2	51	30	762	15	6.8

Rev 04/01/19

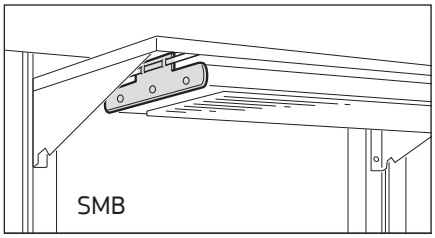

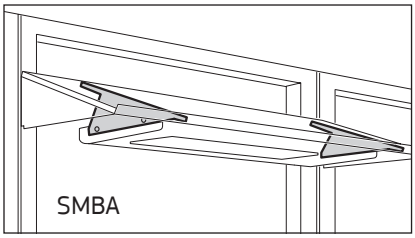

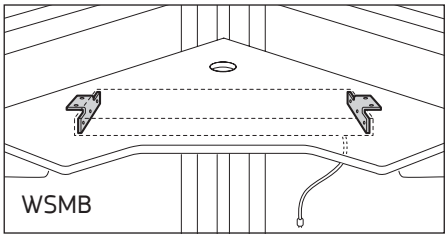

SHELF MOUNT LIGHT BRACKETS

Shelf Mount Light Brackets, Flat and Angled

- Sold in pairs, Shelf Mount Light Brackets (SMBs) mount High Performance Task Lights to 15", 18", and 24" D Bookend and Multi-Function Shelves in 60" and 72" widths. SMBs can be mounted to all widths of 11" D Bookend and Multi-Function Shelves.
- SMBs can be used with Storage Cabinets. LSB13 is required.
- Brackets provide side-to-side and fore and aft adjustment.
- Brackets allow Task Lights to span between two adjacent Bookend and Multi-Function Shelves as well as Storage Cabinets, when shelves are mounted in the flat position.
- Flat Shelf Mount Brackets mount to shelves in the flat position, and Angled Shelf Mount Brackets mount to shelves in sloped positions (SMBAs).

Shelf Mount Light Brackets, Laminate Corner Shelf

- Brackets mount 32" wide LED High Performance Task Lights beneath 36" and 48" wide Laminate Corner Shelves.

NOTES

» LED High Performance Task Lights sold separately; see page 8.8.
» If ordering a light to be mounted under a storage cabinet you will need a SMB (Shelf Mount Light Bracket, Flat) and a LSB13 (Light Spring Bar).
» Work with MFSH and BES11.

How to Specify

Step 1. Product Number

SMB	Shelf Mount Light Bracket, flat
SMBA	Shelf Mount Light Bracket, angled
WSMB	Shelf Mount Light Bracket, corner
LSB13	Light Spring Bar

Step 2. Paint Color Code (excludes LSB13)

AW	Arctic White	**GL**	Grey Light Smooth
AS	Argent Silver	**GT**	Grey Light Texture
BK	Black	**NW**	Neutral White
BT	Black Texture	**ST**	Sand Texture

Product Number	Description	Height		Width		Depth		Weight	
		in.	[mm]	in.	[mm]	in.	[mm]	lb.	[kg]
SMB	Flat, pair	3	76	¼	6	10	254	1	0.5
SMBA	Angled, pair	5 ½	140	¼	6	10	254	1	0.5
WSMB	Corner shelf, pair	2	51	1 ¾	44	10	254	1	0.5
LSB13	Light spring bar, pair					12 ½	318	1	0.5

Rev 03/12/26

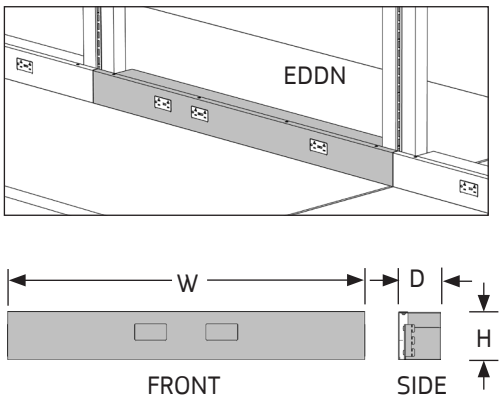

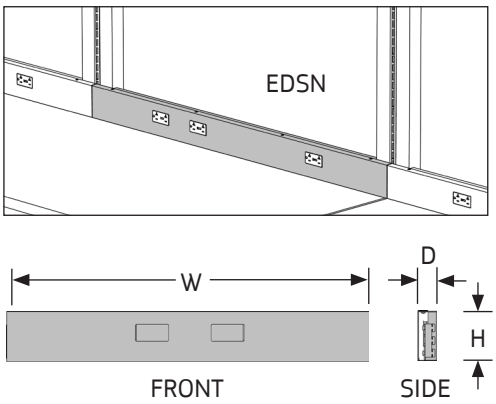

ELECTRICAL DISTRIBUTORS, INSET-MOUNT

- Inset-Mount Electrical Distributors provide either single- or double-sided pre-wired electrical distribution throughout workstations.
- Mounts only to UltraFrames; also functions as a surface backstop.
- Duplex receptacles are ordered separately; their interchangeability permits a variety of circuit combinations to configure on site.
- The eight-wire electrical system is UL Listed as a manufactured Wiring System (UL183) and UL Recognized as an Office Furnishing Accessory (UL1286).
- The system distributes up to four 20 Amp circuits using 20 Amp duplex receptacles.

NOTES

» Duplex Receptacles sold separately; see page 8.16.
» Electrical Entry and Jumper Cables sold separately; see page 8.15.
» Electrical Distributors meeting in a 90° degree corner, spanning a three or four-way connection, or feeding from a Vertical Distributor require mitering of the front cover. To specify a mitered cut to the left or right side of the front cover, substitute a "1" in place of the "0" in the product number depending on left or right side modification, i.e. EDDN4801 (right) and EDSN3610 (left) cut cover.
» To ground dissipative workstation components to the Electrical Distributor order a Electrical Distributor Grounding Kit; see page 5.3.

How to Specify

Step 1. Product Number

EDDN Distributor, inset mount, double-sided
EDSN Distributor, inset mount, single-sided

Step 2. Width

24 24" wide **30** 30" wide **36** 36" wide
48 48" wide **60** 60" wide

Step 3. Cut

00 No Cut **01** Right Cut **10** Left Cut
11 Both Cut

Step 4. Paint Color Code

AW Arctic White **GL** Grey Light Smooth
AS Argent Silver **GT** Grey Light Texture
BK Black **NW** Neutral White
BT Black Texture **ST** Sand Texture

Product Number	Description	Height		Width		Depth		Weight	
		in.	[mm]	in.	[mm]	in.	[mm]	lb.	[kg]
EDDN2400	Double-sided, 2 duplex openings	4	102	24	610	3 ½	89	6	2.7
EDDN3000	Double-sided, 2 duplex openings	4	102	30	762	3 ½	89	8	3.6
EDDN3600	Double-sided, 4 duplex openings	4	102	36	914	3 ½	89	10	4.5
EDDN4800	Double-sided, 6 duplex openings	4	102	48	1219	3 ½	89	13	5.9
EDDN6000	Double-sided, 8 duplex openings	4	102	60	1524	3 ½	89	16	7.3
EDSN2400	Single-sided, 1 duplex opening	4	102	24	610	1 ¾	44	4	1.8
EDSN3000	Single-sided, 1 duplex opening	4	102	30	762	1 ¾	44	5	2.3
EDSN3600	Single-sided, 2 duplex openings	4	102	36	914	1 ¾	44	7	3.2
EDSN4800	Single-sided, 3 duplex openings	4	102	48	1219	1 ¾	44	9	4.1
EDSN6000	Single-sided, 4 duplex openings	4	102	30	762	1 ¾	44	12	5.4

Rev 04/01/19

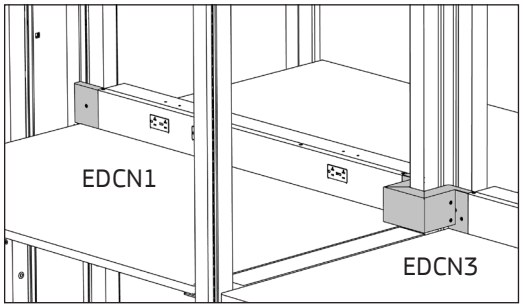

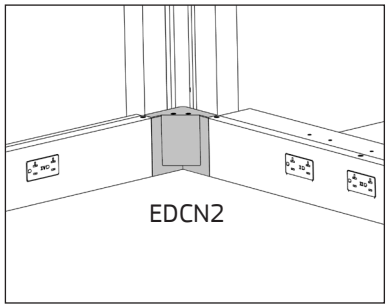

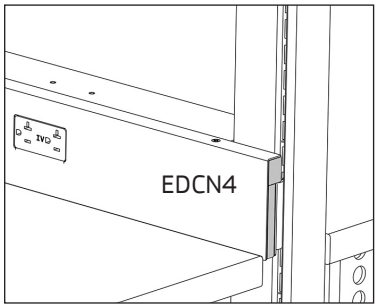

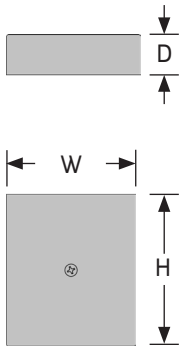

EDCN1

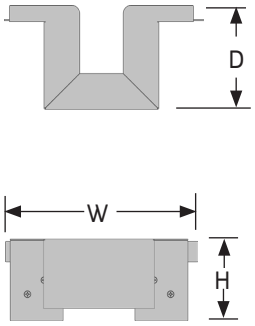

EDCN3

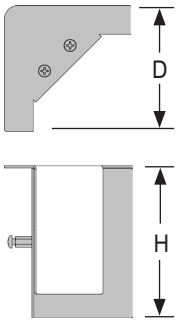

EDCN2

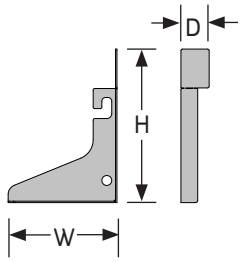

EDCN4

ELECTRICAL DISTRIBUTOR COVERS, INSET-MOUNT

Distributor Covers

- Inset-Mount Electrical Distributor Covers hide conduit connections between Inset-Mount Electrical and/or Vertical Distributors.
- Chase Entry Electrical Distributor Covers mount to Electrical Distributors with a "1" style front modification on either the left or right side of the distributor.
- Corner and 3-Way Frame Electrical Distributor Span Covers mount to Electrical Distributors with a "1" style front modification of the distributors on both sides.

End Cover

- As an optional visual cap, the Inset-Mount Electrical Distributor End Cover can be added to the left or right end (specify L/R) of an Electrical Distributor.
- Includes knock-out tab for cable entry.
- Mounts to "0" style (uncut) ends; see page 8.11.

How to Specify

Step 1. Product Number

EDCN1	Chase Entry
EDCN2	Corner
EDCN3	3-Way Frame Span
EDCN4L	End Cover, left-hand
EDCN4R	End Cover, right-hand

Step 2. Paint Color Code

AW	Arctic White	**GL**	Grey Light Smooth
AS	Argent Silver	**GT**	Grey Light Texture
BK	Black	**NW**	Neutral White
BT	Black Texture	**ST**	Sand Texture

Product Number	Description	Height		Width		Depth		Weight	
		in.	[mm]	in.	[mm]	in.	[mm]	lb.	[kg]
EDCN1	Chase entry	4	102	3 3/8	86	3/4	19	1	0.5
EDCN2	Corner	4	102	3 3/8	86	3 3/8	86	1	0.5
EDCN3	3-way frame span	4	102	8 3/4	222	5	127	1	0.5
EDCN4L	End cover, left-hand	3 7/8	98	2 3/4	70	3/4	19	1/2	0.2
EDCN4R	End cover, right-hand	3 7/8	98	2 3/4	70	3/4	19	1/2	0.2

Rev 04/01/19

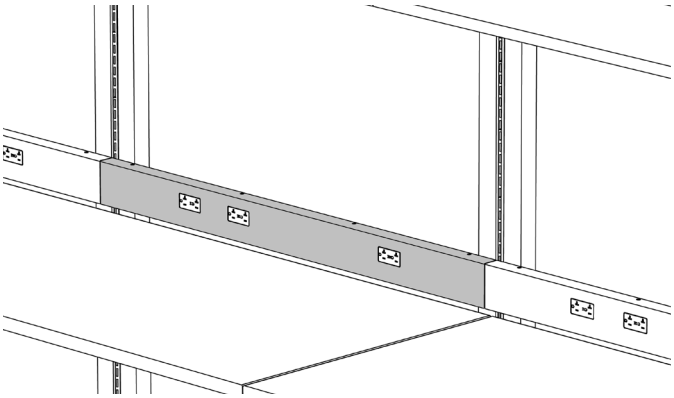

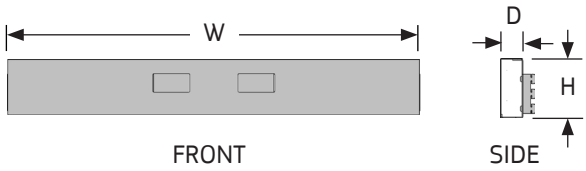

ELECTRICAL DISTRIBUTORS, FACE-MOUNT

- Face-Mount Electrical Distributors provide single-sided pre-wired electrical distribution throughout workstations.
- Mounts to UltraFrames or Wall Tracks.
- Duplex receptacles are ordered separately; their interchangeability permits a variety of circuit combinations to configure on site.
- The eight-wire electrical system is UL Listed as a Manufactured Wiring System (UL183) and UL Recognized as an Office Furnishing Accessory (UL1286).
- The system distributes up to four 20 Amp circuits using 20 Amp duplex receptacles.

NOTES

» Duplex Receptacles sold separately; see page 8.16.
» Electrical Entry and Jumper Cables sold separately; see page 8.15.
» Electrical Distributors feeding from a Vertical Distributor require modification of the front cover. Specify a "1" in place of the "0" in the product number depending on left or right side modification, i.e. EDSF4801 (right) and EDSF3610 (left) hand entry.
» Electrical Distributors meeting in a 90° degree corner or spanning a three or four-way connection, require mitering of the front cover. To specify a mitered cut to the left or right side of the front cover, substitute a "2" in place of the "0" in the product number depending on left or right side modification, i.e. EDSF4802 (right) and EDSF3620 (left) cut cover.
» To ground dissipative workstation components to the Electrical Distributor order a Electrical Distributor Grounding Kit; see page 5.3.

How to Specify

Step 1. Product Number

EDSF

Step 2. Width

24	24" wide	**30**	30" wide	**36**	36" wide
48	48" wide	**60**	60" wide	**72**	72" wide

Step 3. Cut

00	No Cut	**01**	Right Cut	**10**	Left Cut
11	Both Cut	**02**	Right Miter	**20**	Left Miter
22	Both Miter	**03**	Right Trans	**30**	Left Trans
33	Both Trans				

Trans = Transition

Step 4. Paint Color Code

AW	Arctic White	**GL**	Grey Light Smooth
AS	Argent Silver	**GT**	Grey Light Texture
BK	Black	**NW**	Neutral White
BT	Black Texture	**ST**	Sand Texture

Product Number	Description	Height		Width		Depth		Weight	
		in.	[mm]	in.	[mm]	in.	[mm]	lb.	[kg]
EDSF2400	Single-sided, 1 duplex opening	4	102	24	610	1 ¾	44	5	2.3
EDSF3000	Single-sided, 1 duplex opening	4	102	30	762	1 ¾	44	6	2.7
EDSF3600	Single-sided, 2 duplex openings	4	102	36	914	1 ¾	44	8	3.6
EDSF4800	Single-sided, 3 duplex openings	4	102	48	1219	1 ¾	44	10	4.5
EDSF6000	Single-sided, 4 duplex openings	4	102	60	1524	1 ¾	44	13	5.9
EDSF7200	Single-sided, 4 duplex openings	4	102	72	1829	1 ¾	44	15	6.8

Rev 11/23/26

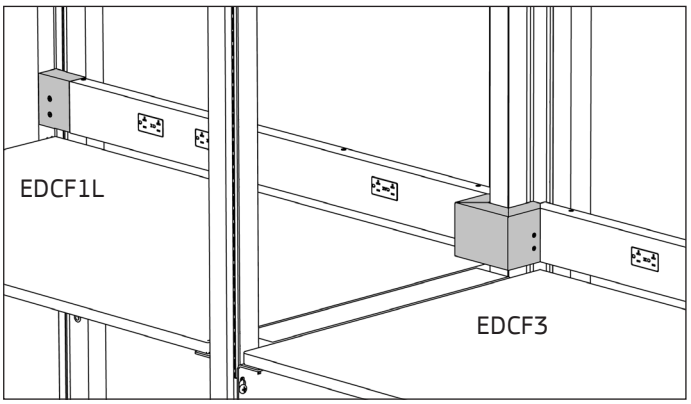

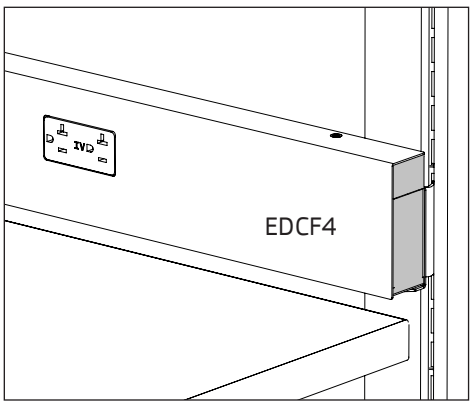

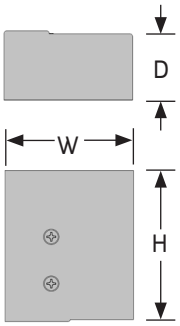

EDCF1

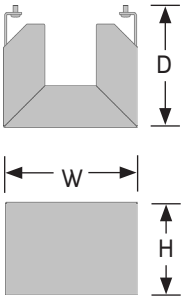

EDCF3

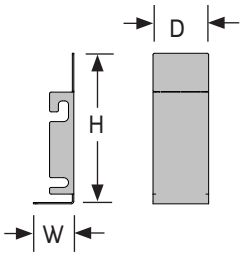

EDCF4

ELECTRICAL DISTRIBUTOR COVERS, FACE-MOUNT

Distributor Covers

- Face-Mount Electrical Distributor Covers hide conduit connections between Face-Mount Electrical Distributors and/or Vertical Distributors.
- Chase Entry Electrical Distributor Covers mount to Electrical Distributors with a "1" style front modification on the left or right side of the distributor.
- 3-Way frame span Electrical Distributor Covers mount to Electrical Distributors with a "2" style front modification on each distributor at a 3-way frame connection.

End Cover

- As an optional visual cap, the Face-Mount Electrical Distributor End Cover is non-handed and mounts to the end of an Electrical Distributor.
- Includes knock-out tab for power entry.
- Mounts to "0" style (uncut) ends; see page 8.13.

How to Specify

Step 1. Product Number

EDCF1L Chase Entry, left-hand
EDCF1R Chase Entry, right-hand
EDCF3 3-Way Frame Span
EDCF4 End Cover

Step 2. Paint Color Code

AW Arctic White
AS Argent Silver
BK Black
BT Black Texture
GL Grey Light Smooth
GT Grey Light Texture
NW Neutral White
ST Sand Texture

Product Number	Description	Height		Width		Depth		Weight	
		in.	[mm]	in.	[mm]	in.	[mm]	lb.	[kg]
EDCF1L	Chase entry, left-hand	4	102	3 3/8	86	1 3/4	44	1	0.5
EDCF1R	Chase entry, right-hand	4	102	3 3/8	86	1 3/4	44	1	0.5
EDCF3	3-way frame span	4	102	5 1/2	140	4 3/4	121	1	0.5
EDCF4	End cover	3 7/8	98	1	25	1 3/8	35	1/2	0.2

Rev 04/01/19

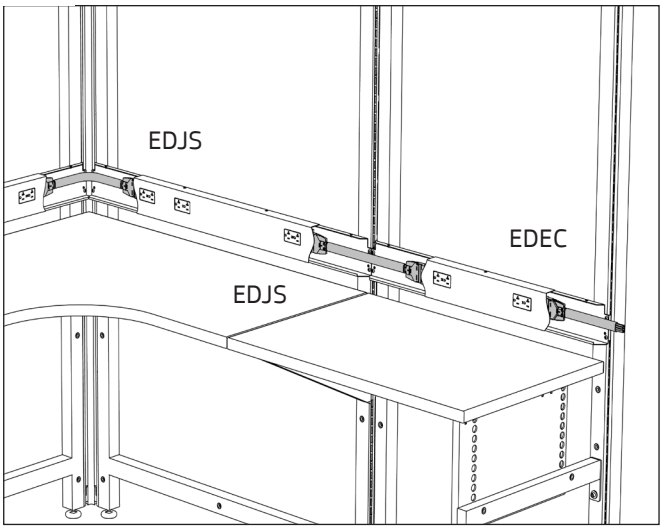

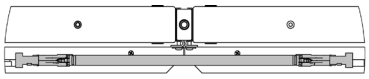

FRAME TO FRAME (EDJS)

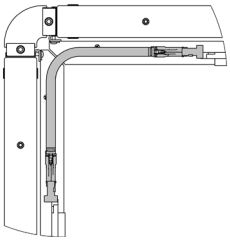

CORNER (EDJS)

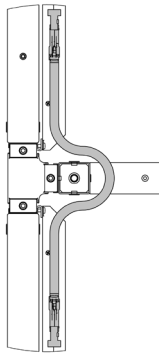

THREE OR FOUR-WAY FRAME SPAN (EDJT)

ELECTRICAL DISTRIBUTOR POWER CABLES

- Metal flex jumpers and entry cables provide power connection of eight-wire, four-circuit Electrical Distributors in various configurations.
- Jumpers and Entry Cables work with all Electrical Distributor styles.
- Electrical Entry Cables require hard-wired connection to building power supply. Each cable is capable of powering 13 Duplex Receptacles per circuit for a total of 52 Duplex Receptacles per Electrical Entry Cable.
- Electrical Jumpers and Entry Cables integrate with an electrical system which is UL Listed as a Manufactured Wiring System (UL183) and UL Recognized as an Office Furnishing Accessory (UL1286).

NOTES

» Additional Electrical Jumper and Entry Cable lengths available; consult factory.

» 30" wide electrical distributor requires a longer jumper length on the left end only; specify EDJS6 or EDJT6.

How to Specify

Step 1. Product Number

EDEC072
EDEC144
EDJS
EDJT
EDJS6
EDJT6

Product Number	Description	Width		Weight	
		in.	[mm]	lb.	[kg]
EDEC072	Entry cable	72	1829	3	1
EDEC144	Entry cable	144	3658	6	3
EDJS	Jumper, frame-to-frame or corner	19	483	1	0.5
EDJT	Jumper, three or four-way	27	686	1	0.5
EDJS6	Jumper, 30” wide dist. left end, frame-to-frame or corner	25	635	1	0.5
EDJT6	Jumper, 30” wide dist. left end, three or four-way	33	838	1	0.5

Rev 03/07/13

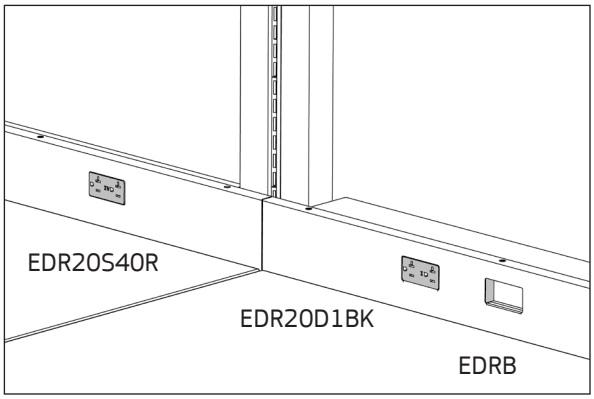

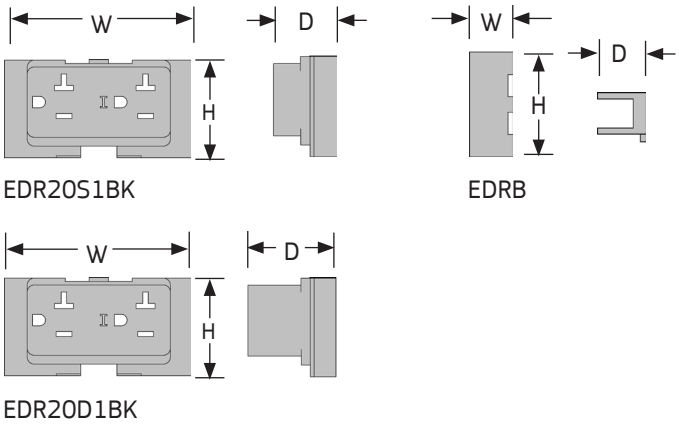

ELECTRICAL DISTRIBUTOR RECEPTACLES

Duplex Receptacles

- Duplex Receptacles provide access to circuits 1, 2, 3 (black finish) and isolated ground circuit 4 (orange finish) on Electrical Distributors. Receptacles include circuit identification stamped on the face.
- Maximum of 13 per circuit per building source.
- Electrical Distributor cover and/or internal junction block removal is required to install and reconfigure receptacles within the Electrical Distributor.
- Integrates with an eight-wire electrical system, UL Listed as a Manufactured Wiring System (UL183) and UL Recognized as an Office Furnishing Accessory (UL1286).
- Use Single-depth for Face-Mount Electrical Distributors (EDSF) and Inset-Mount Single-Sided Electrical Distributors (EDSN).
- Use Double-depth for Inset-Mount Double-Sided Electrical Distributors (EDDN).

Blank Dust Cover

- Plastic cover slides into the junction block of the Electrical Distributor where the block is not equipped with a Duplex Receptacle.
- Works with all Electrical Distributor styles.
- Finish is Black.

NOTES

» 15 Amp duplex receptacles are also available; consult factory.

How to Specify

Step 1. Product Number

EDR20 Electrical Distributor Receptacle
EDRB Electrical Distributor Dust Cover

Step 2. Depth

S Single depth **D** Double depth

Step 3. Circuit Number

1BK Circuit 1, Black
2BK Circuit 2, Black
3BK Circuit 3, Black
4OR Isolated Ground, Orange

Product Number	Description	Height		Width		Depth		Weight	
		in.	[mm]	in.	[mm]	in.	[mm]	lb.	[kg]
EDR20S1BK	Single-depth, circuit 1	1 ¾	44	3 ½	89	1 ⅛	29	1	0.5
EDR20S2BK	Single-depth, circuit 2	1 ¾	44	3 ½	89	1 ⅛	29	1	0.5
EDR20S3BK	Single-depth, circuit 3	1 ¾	44	3 ½	89	1 ⅛	29	1	0.5
EDR20S4OR	Single-depth, circuit 4 isolated ground	1 ¾	44	3 ½	89	1 ⅛	29	1	0.5
EDR20D1BK	Double-depth, circuit 1	1 ¾	44	3 ½	89	1 ⅝	41	1	0.5
EDR20D2BK	Double-depth, circuit 2	1 ¾	44	3 ½	89	1 ⅝	41	1	0.5
EDR20D3BK	Double-depth, circuit 3	1 ¾	44	3 ½	89	1 ⅝	41	1	0.5
EDR20D4OR	Double-depth, circuit 4 isolated ground	1 ¾	44	3 ½	89	1 ⅝	41	2	0.9
EDRB	Dust cover	1 ¾	44	3 ½	89	½	13	1	0.5

Rev 03/20/12

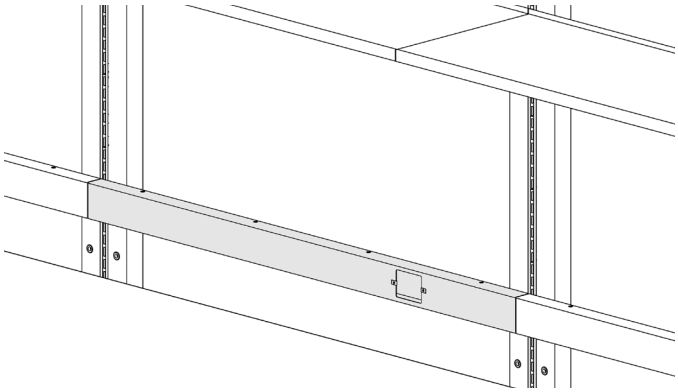

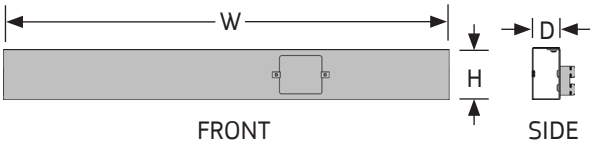

DATA DISTRIBUTORS, FACE-MOUNT

- Face-Mount Data Distributors provide a double-sided chase for routing data cables throughout workstations.
- Mounts to UltraFrames or Wall Track.
- Cut-outs are sized for faceplates with a 3.28" screw spacing; the clearance in each opening is 2.84" W by 2.25" H. Faceplates and data jacks are not included. Two #6-32 clip-on nuts are included per opening for faceplate fastening.
- The pass-thru area between adjacent Face-Mount Data Distributors is approximately 3.8 in.^{2}

NOTES

» Data Distributors feeding from a Vertical Distributor require modification of the front cover. Specify a "1" in place of one of the "0" in the product number, depending on the left or right side modification; i.e. DDF3601 (right) or DDF3610 (left) hand entry.

» Data Distributors meeting in a 90° corner or spanning a three- or four-way connection require mitering of the front cover. Specify a "2" in place of one of the "0" in the product number, depending on left or right side modification; i.e. DDF4802 (right) or DDF3620 (left) miter.

How to Specify

Step 1. Product Number

DDF

Step 2. Width

24	24" wide	**30**	30" wide	**36**	36" wide
48	48" wide	**60**	60" wide	**72**	72" wide

Step 3. Cut

00	No Cut	**01**	Right Cut	**10**	Left Cut
11	Both Cut	**02**	Right Miter	**20**	Left Miter
22	Both Miter	**03**	Right Trans	**30**	Left Trans
33	Both Trans				

Trans = Transition

Step 4. Paint Color Code

AW	Arctic White	**GL**	Grey Light Smooth
AS	Argent Silver	**GT**	Grey Light Texture
BK	Black	**NW**	Neutral White
BT	Black Texture	**ST**	Sand Texture

Product Number	Description	Height		Width		Depth		Weight	
		in.	[mm]	in.	[mm]	in.	[mm]	lb.	[kg]
DDF2400	Double-sided, 1 faceplate cutout/side	3	76	24	610	1 ¾	44	3	1.4
DDF3000	Double-sided, 1 faceplate cutout/side	3	76	30	762	1 ¾	44	4	1.8
DDF3600	Double-sided, 1 faceplate cutout/side	3	76	36	914	1 ¾	44	5	2.3
DDF4800	Double-sided, 1 faceplate cutout/side	3	76	48	1219	1 ¾	44	7	3.2
DDF6000	Double-sided, 2 faceplate cutout/side	3	76	60	1524	1 ¾	44	8	3.6
DDF7200	Double-sided, 2 faceplate cutout/side	3	76	72	1829	1 ¾	44	10	4.5

Rev 11/23/26

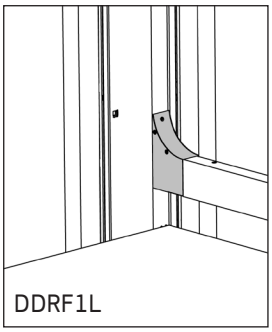
DDRF1L

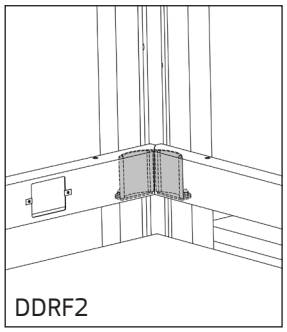
DDRF2

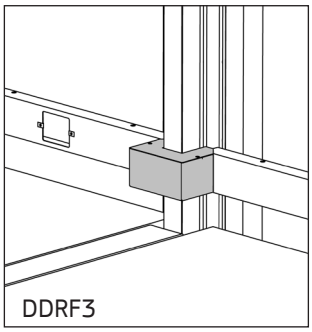
DDRF3

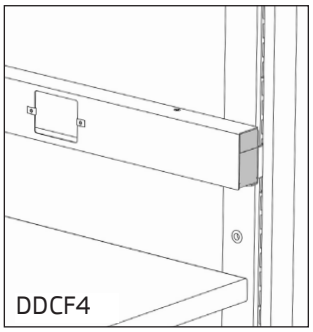
DDCF4

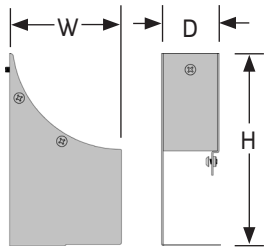

DDRF1L

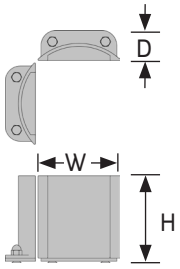

DDRF2

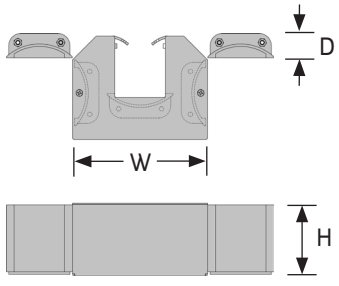

DDRF3

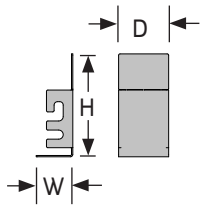

DDCF4

DATA DIST. ROUTERS/END COVERS, FACE-MOUNT

Router

- Face-Mount Data Distributor Routers guide cables at a 2" radius between Face-Mount Data Distributors and/or Vertical Distributors.
- Chase Entry Data Distributor Routers mount to Data Distributors with a "1" style front modification on the left or right side of the distributor.
- Two-way Corner and Three-way Frame Span Data Distributor Routers mount to Data Distributors with a "2" style front modification on each distributor.

End Cover

- As an optional visual cap, the End Cover can be added to the left or right end (specify L/R) of a Data Distributor.
- Includes knock-out tab for cable entry.
- Mounts to "0" style (uncut) ends; see page 8.17.

NOTES

» DDRF2 contains internal guides and required mounting hardware and does not have a color finish option.

How to Specify

Step 1. Product Number

DDRF1L	Chase Entry, left-hand
DDRF1R	Chase Entry, right-hand
DDRF2	2-Way Corner
DDRF3	3-Way Frame Span
DDCF4	End Cover

Step 2. Paint Color Code

AW	Arctic White	**GL**	Grey Light Smooth
AS	Argent Silver	**GT**	Grey Light Texture
BK	Black	**NW**	Neutral White
BT	Black Texture	**ST**	Sand Texture

Product Number	Description	Height		Width		Depth		Weight	
		in.	[mm]	in.	[mm]	in.	[mm]	lb.	[kg]
DDRF1L	Chase entry, left-hand	6	152	3 3/8	86	1 3/4	44	1	0.5
DDRF1R	Chase entry, right-hand	6	152	3 3/8	86	1 3/4	44	1	0.5
DDRF2	Two-way corner	3	76	3 3/4	95	3 3/4	95	1	0.5
DDRF3	Three-way frame span	3	76	5 1/2	140	10 3/4	273	2	0.9
DDCF4	End cover	2 7/8	73	1	25	1 3/8	35	1/2	0.2

Rev 06/10/24

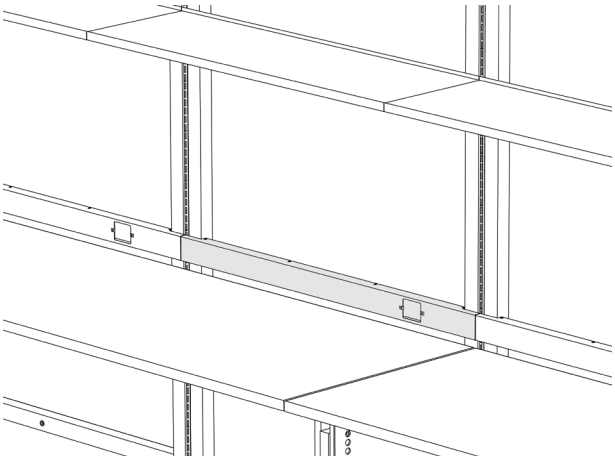

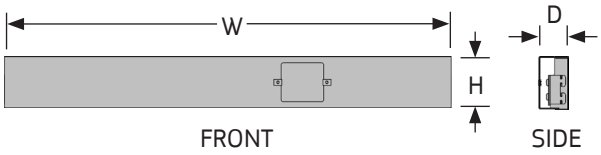

DATA DISTRIBUTORS, INSET-MOUNT

- Inset-Mount Data Distributors provide a double-sided chase for routing data cables throughout workstations.
- Mounts only to UltraFrames; will also fit behind surfaces to function as a surface backstop.
- Cut-outs are sized for faceplates with a 3.28" screw spacing; the clearance in each opening is 2.84" wide by 2.25" high. Faceplates and data jacks are not included. Two #6-32 clip-on nuts are included per opening for faceplate fastening.
- The pass-thru area between adjacent Inset-Mount Data Distributors is approximately 1.5 in.^{2}

NOTES

» Data Distributors feeding from a Vertical Distributor require modification of the front cover. Specify a "1" in place of one of the "0" in the product number, depending on the left or right side modification; i.e. DDN4801 (right) or DDN3610 (left) hand entry.

How to Specify

Step 1. Product Number

DDN

Step 2. Width

24	24" wide	**30**	30" wide	**36**	36" wide
48	48" wide	**60**	60" wide		

Step 3. Cut

00	No Cut	**01**	Right Cut	**10**	Left Cut
11	Both Cut				

Step 4. Paint Color Code

AW	Arctic White	**GL**	Grey Light Smooth
AS	Argent Silver	**GT**	Grey Light Texture
BK	Black	**NW**	Neutral White
BT	Black Texture	**ST**	Sand Texture

Product Number	Description	Height		Width		Depth		Weight	
		in.	[mm]	in.	[mm]	in.	[mm]	lb.	[kg]
DDN2400	Double-sided, 1 faceplate cutout/side	3	76	24	610	1 ¾	44	3	1.4
DDN3000	Double-sided, 1 faceplate cutout/side	3	76	30	762	1 ¾	44	4	1.8
DDN3600	Double-sided, 1 faceplate cutout/side	3	76	36	914	1 ¾	44	5	2.3
DDN4800	Double-sided, 1 faceplate cutout/side	3	76	48	1219	1 ¾	44	6	2.7
DDN6000	Double-sided, 2 faceplate cutouts/side	3	76	60	1524	1 ¾	44	8	3.6

Rev 04/01/19

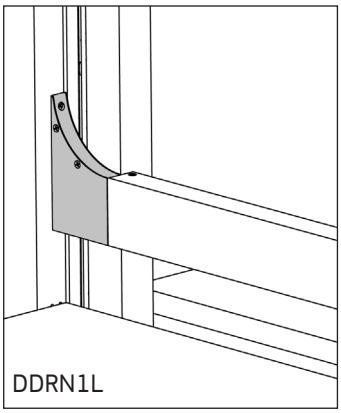
DDRN1L

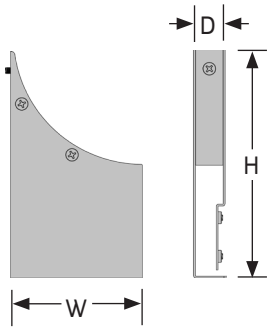

DDRN1L

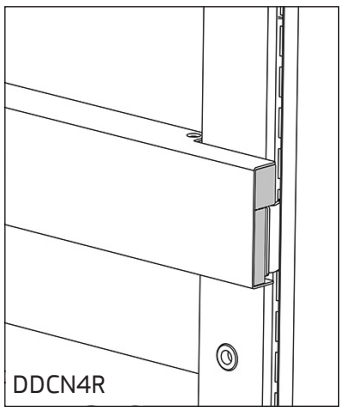
DDCN4R

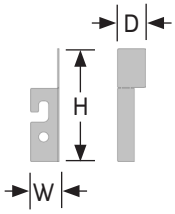

DDCN4R

DATA DIST. ROUTERS/END COVERS, INSET-MOUNT

Routers

- Data Distributor Routers guide cables at a 2" radius between Inset-Mount Data Distributors and Vertical Distributors.
- Chase Entry Data Distributor Router mounts to Data Distributors with a "1" style front modification on either the left or right side of the distributor.

End Cover

- As an optional visual cap, the Inset-Mount Data Distributor End Cover can be added to the left or right end (specify L/R) of a Data Distributor.
- Includes knock-out tab for cable entry.
- Mounts to "0" style (uncut) ends; see page 8.19.

How to Specify

Step 1. Product Number

DDRN1L	Chase Entry, left-hand
DDRN1R	Chase Entry, right-hand
DDCN4L	End Cover, left-hand
DDCN4R	End Cover, right-hand

Step 2. Paint Color Code

AW	Arctic White	**GL**	Grey Light Smooth
AS	Argent Silver	**GT**	Grey Light Texture
BK	Black	**NW**	Neutral White
BT	Black Texture	**ST**	Sand Texture

Product Number	Description	Height		Width		Depth		Weight	
		in.	[mm]	in.	[mm]	in.	[mm]	lb.	[kg]
DDRN1L	Chase entry, left-hand	3	76	3 3/8	86	3/4	19	1	0.5
DDRN1R	Chase entry, right-hand	3	76	3 3/8	86	3/4	19	1	0.5
DDCN4L	End cover, left-hand	2 7/8	73	3/4	19	3/4	19	1/2	0.2
DDCN4R	End cover, right-hand	2 7/8	73	3/4	19	3/4	19	1/2	0.2

Rev 04/01/19

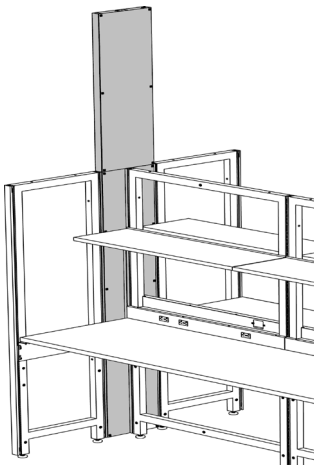

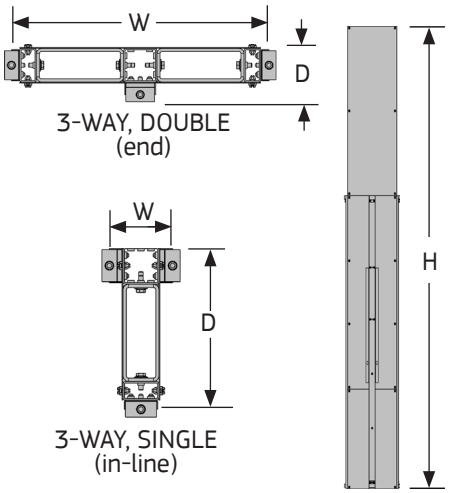

VERTICAL DISTRIBUTORS

- Vertical Distributors connect UltraFrames with Glides at 90° angles while providing concealed single/double chases for dropping electrical and data supply cables.
- Chase area has a cross-sectional 1.64" x 4.37" cable clearance.
- Cover panels are secured with ¼-turn fasteners enabling easy access to installed cabling.
- Allows entry of power and data cables into Electrical and/or Data Distributors in adjustable heights from 30" to 60" above the floor. Access Panels vary between Inset-Mount and Face-Mount style Electrical and Data Distributors.
- Can be configured in the field to connect 48", 62" or 80" high UltraFrames.
- Mid End Covers (MEC80) are used to cover exposed hardware on the end of the Vertical Distributors.

How to Specify

Step 1. Product Number

VD126

Step 2. Single/Double

S Single **D** Double (in-line version only)

Step 3. Way

280 2-way, 80" Single only
380 3-way, 80" Single/Double
480 4-way, 80" Single/Double

Step 4. Access

F Face-Mount
N Inset-Mount

Step 5. Location

M In-Line
H End

Step 6. Paint Color Code

AW Arctic White
AS Argent Silver
BK Black
BT Black Texture
GL Grey Light Smooth
GT Grey Light Texture
NW Neutral White
ST Sand Texture

NOTES

» For transitions between Electrical and Vertical Distributors, specify Electrical Distributors with a chase entry cut end; see pages 8.11-8.12. To order Electrical Distributor Chase Entry Cover, consult factory.

» For transitions and cable bend radius control between Data and Vertical Distributors, specify Data Distributors with a chase entry cut end; see pages 8.15-8.16. To order Data Distributor Entry Router separately, consult factory.

Product Number	Description	Height		Width		Depth		Weight	
		in.	[mm]	in.	[mm]	in.	[mm]	lb.	[kg]
VD126D380FH	Double, 3-way, face-mount access, end	126	3200	15 ½	394	2 ¾	70	129	58.5
VD126D380NH	Double, 3-way, inset-mount access, end	126	3200	15 ½	394	2 ¾	70	129	58.5
VD126D480FM	Double, 4-way, face-mount access, in-line	126	3200	15 ½	394	3 ½	89	137	62.1
VD126D480NM	Double, 4-way, inset-mount access, in-line	126	3200	15 ½	394	3 ½	89	137	62.1
VD126S280FH	Single, 2-way, face-mount access, end	126	3200	2 ¾	70	8 ¾	222	80	36.3
VD126S280NH	Single, 2-way, inset-mount access, end	126	3200	2 ¾	70	8 ¾	222	80	36.3
VD126S380FH	Single, 3-way, face-mount access, end	126	3200	2 ¾	70	9 ½	241	84	38.1
VD126S380FM	Single, 3-way, face-mount access, in-line	126	3200	3 ½	89	8 ¾	222	85	38.6
VD126S380NH	Single, 3-way, inset-mount access, end	126	3200	2 ¾	70	9 ½	241	84	38.1
VD126S380NM	Single, 3-way, inset-mount access, in-line	126	3200	3 ½	89	8 ¾	222	85	38.6
VD126S480FM	Single, 4-way, face-mount access, in-line	126	3200	3 ½	89	9 ½	241	89	40.4
VD126S480NM	Single, 4-way, inset-mount access, in-line	126	3200	3 ½	89	9 ½	241	89	40.4

Rev 11/23/26

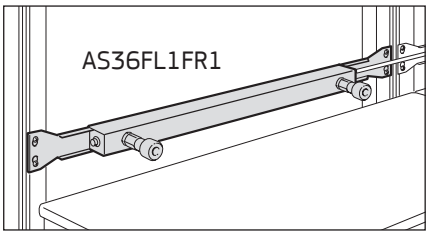

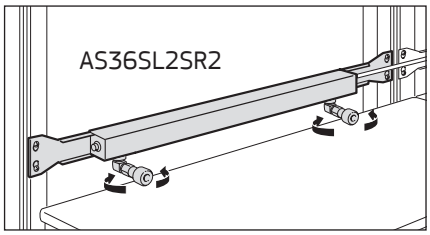

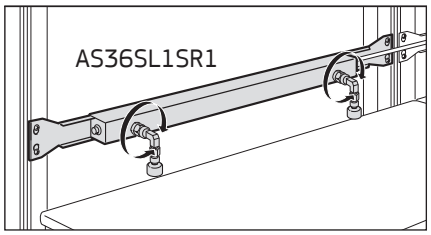

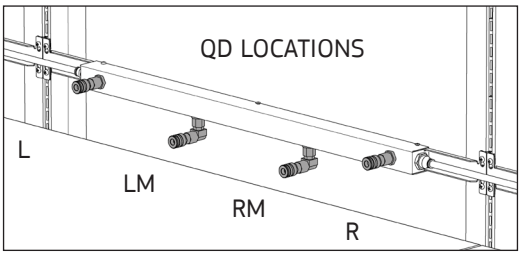

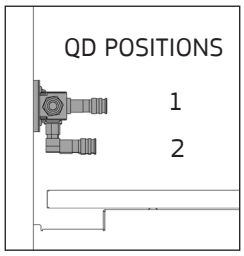

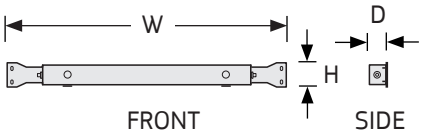

AIR STRIPS

- Air Strips distribute compressed air or low pressure vacuum service in workstations.
- Each strip includes two single swivel or two single fixed ¼" Quick Disconnect Fittings in locations left front (L1) and right front (R1) or left bottom (L2) and right bottom (R2). Other combinations can be field installed by purchasing additional components.
- Includes bulkhead unions on each end with push-in fittings for ½" OD tube for connection of adjacent strips and connection to building air sources.

NOTES

» Compressed Air Entry/End Kits (CAEK) and Compressed Air Tube Kits (CATK) sold separately; see page 8.23.

» Additional Quick Disconnect (QD) Fittings and accessories sold separately; for field installation of other combinations of fittings see page 8.23.

» Only 48" and 60" Air Strips have left middle (LM) and right middle (RM) locations for QD fittings. They install in position 2 only. The 24", 30" and 36" strips can accommodate two QD fittings; 48" and 60" accommodate up to four QD fittings.

» For additional fitting options consult factory.

How to Specify

Step 1. Product Number

AS

Step 2. Width

24	24" wide	**30**	30" wide	**36**	36" wide
48	48" wide	**60**	60" wide		

Step 3. Fitting Type

FL1FR1	Fixed, front
SL1SR1	Swivel, front
SL2SR2	Swivel, bottom

Step 4. Paint Color Code

AW	Arctic White	**GL**	Grey Light Smooth
AS	Argent Silver	**GT**	Grey Light Texture
BK	Black	**NW**	Neutral White
BT	Black Texture	**ST**	Sand Texture

Product Number	Description	Height		Width		Depth		Weight	
		in.	[mm]	in.	[mm]	in.	[mm]	lb.	[kg]
AS24FL1FR1	Fixed left & right, front	3 ¼	83	24	610	2	51	11	5.0
AS24SL1SR1	Swivel left & right, front	3 ¼	83	24	610	2	51	11	5.0
AS24SL2SR2	Swivel left & right, bottom	3 ¼	83	24	610	2	51	11	5.0
AS30FL1FR1	Fixed left & right, front	3 ¼	83	30	762	2	51	12	5.4
AS30SL1SR1	Swivel left & right, front	3 ¼	83	30	762	2	51	12	5.4
AS30SL2SR2	Swivel left & right, bottom	3 ¼	83	30	762	2	51	12	5.4
AS36FL1FR1	Fixed left & right, front	3 ¼	83	36	914	2	51	13	5.9
AS36SL1SR1	Swivel left & right, front	3 ¼	83	36	914	2	51	13	5.9
AS36SL2SR2	Swivel left & right, bottom	3 ¼	83	36	914	2	51	13	5.9
AS48FL1FR1	Fixed left & right, front	3 ¼	83	48	1219	2	51	14	6.4
AS48SL1SR1	Swivel left & right, front	3 ¼	83	48	1219	2	51	14	6.4
AS48SL2SR2	Swivel left & right, bottom	3 ¼	83	48	1219	2	51	14	6.4
AS60FL1FR1	Fixed left & right, front	3 ¼	83	60	1524	2	51	15	6.8
AS60SL1SR1	Swivel left & right, front	3 ¼	83	60	1524	2	51	15	6.8
AS60SL2SR2	Swivel left & right, bottom	3 ¼	83	60	1524	2	51	15	6.8

Rev 04/01/19

COMPRESSED AIR ACCESSORIES

Compressed Air Entry/End Kits (CAEK)

- CAEKs provide air connection to building air supplies and provide termination for runs. One kit is required for each entry and end of single or multiple runs of Tool Travelers with Air or Air Strips. Kits include 60" of ½" OD nylon tubing, a ¼" by ⅜" FPT nipple, a ½" push-in by ⅜" MPT straight adapter and a termination plug.

Compressed Air Tube Kits (CATK)

- CATKs provide additional tubing to install compressed air service to workstations; order to connect adjacent Air Strips in a run. Kits include fifty feet of ½" OD nylon tubing and a Tube Cutter.

Compressed Air Coiled Tube Kits (CAC)

- CACs provide for flexible delivery of compressed air from Tool Travelers with Air to air tools in workstations. Kits include 60" of ¼" ID coiled poly tube with a ¼" Quick Disconnect fitting on one end for attachment to an air tool and a ¼" push-in by ¼" MPT straight adapter on other end for attachment to the Tool Traveler Car.

Tube Cutters (TCUT)

- Required to make straight cuts in nylon tube for proper connection of air fittings on Tool Travelers with Air or Air Strips.

Termination Plugs (TPLUG)

- Plastic plugs enclose the ends of ½" OD nylon tube to terminate air runs.

NPT Straight Adapters (NPT)

- The ½" push-in by ⅜" MPT straight adapters attach to the ½" OD nylon tube on Tool Travelers with Air or Air Strips allowing connection to building air supplies.

How to Specify

Step 1. Product Number

CAEK	CATK
CAC	TCUT
TPLUG	NPT
ELB½	TEE½

Product Number	Description	Weight lb.	Weight [kg]
CAEK	Compressed air entry/end kit	2	0.9
CATK	Compressed air tube kit	15	6.8
CAC	Compressed air coil tube kit	3	1.4
TCUT	Tube cutter	1	0.5
TPLUG	Termination plug, five pack	1	0.5
NPT	NPT straight adapter, five pack	1	0.5
ELB½	Elbow connector 90 degree	1	0.5
TEE½	Tee connector three-way	1	0.5

Rev 06/10/24

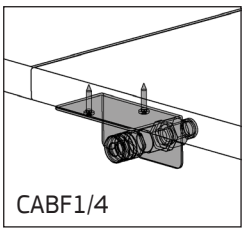
CABF1/4

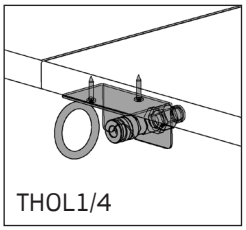
THOL1/4

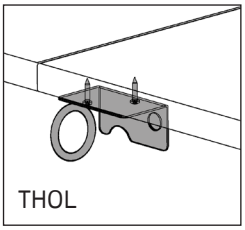
THOL

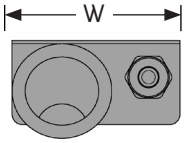

FRONT

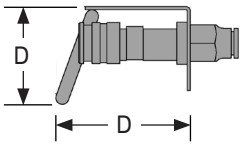

SIDE

AIR BRACKETS, SURFACE-MOUNT

Tool Holster Brackets (THOL)

- Brackets suspend small hand tools beneath surfaces.

Tool Holster Brackets with Compressed Air (THOL¼)

- Brackets suspend small air tools beneath surfaces.
- Includes a fixed ¼" Quick Disconnect Fitting, 72" of ½" tubing, a ½" push-in by ⅜" MPT straight adapter and a ¼" by ⅜" FPT nipple.
- Assemblies connect to Quick Disconnect Fittings, Air Strip bulkhead fittings or building supplies.

Surface Brackets with Compressed Air (CABF¼)

- Brackets suspend compressed air Quick Disconnect Fittings beneath surfaces.
- Includes a fixed ¼" Quick Disconnect Fitting, 72" of ½" tubing, a ½" push-in by ⅜" MPT straight adapter and a ¼" by ⅜" FPT nipple.
- Assemblies connect to Quick Disconnect Fittings, Air Strip bulkhead fittings or building supplies.

NOTES

» Finish is stainless steel on all brackets.

How to Specify

Step 1. Product Number

THOL	Tool Holster
THOL¼	Tool Holster, air
CABF¼	Surface Bracket, air

Product Number	Description	Height		Width		Depth		Weight	
		in.	[mm]	in.	[mm]	in.	[mm]	lb.	[kg]
THOL	Tool holster	2 ½	64	4	102	3 ¼	83	3	1.4
THOL¼	Tool holster, air	2 ½	64	4	102	3 ¼	83	6	2.7
CABF¼	Surface bracket, air	2	51	4	102	2 ½	64	6	2.7

Rev 01/29/09

CABLE MANAGEMENT

Cable Ducts 9.2
Cable Ring Ducts. 9.3
Cable Trays, Frame Mount 9.4
Cable Trays, Universal 9.5
Uniclips and D-rings. 9.6

9

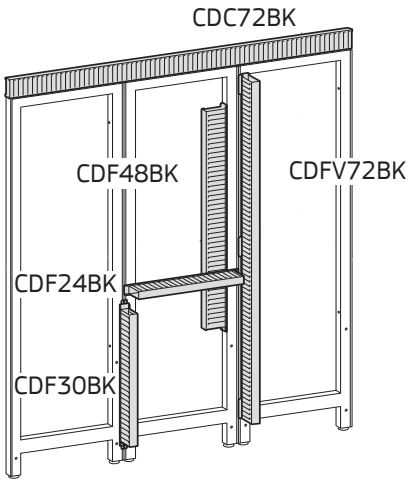

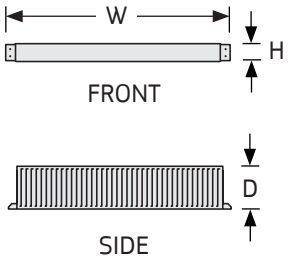

CABLE DUCTS

- Cable Ducts provide vertical and horizontal cable management in workstations.
- Composed of PVC slotted duct with flush mount duct covers that snap on and off for easy access.
- Frame-mounted Cable Ducts are fastened to painted steel plates. Assemblies mount vertically on the centerline of two inline frames or horizontally on frames with hanger clips.
- Frame-mounted Cable Ducts also fasten vertically on the inside of 80" and 96" high UltraFrames to captivators.
- One 48" frame-mounted Cable Duct per side mounts to captivators inside 80" high UltraFrames. One 24" and one 48", two 36" or one 72" Cable Duct per side mounts to captivators inside 96" high UltraFrames.
- Vertical mount Cable Ducts fasten off center of two inline frames with three hanger clips and plates.
- Top-mount Cable Ducts fasten to captivators or knockouts in top cross members of 80" and 96" high UltraFrames with #10-24 screws.
- Self mount Cable Ducts attach anywhere on frames with pressure sensitive adhesive tape for temporary or permanent mounting.
- Cable Ducts feature ⅝" scored fingers providing additional access for cable leads.
- Finish is Black.

How to Specify

Step 1. Product Number

CDF	Frame-Mount Cable Duct
CDFV	Vertical Mount Cable Duct, 72" only
CDS	Self Mount Cable Duct, 72" only
CDC	Top Mount Cable Duct, 72" only

Step 2. Width

24	24" wide	**30**	30" wide	**36**	36" wide
48	48" wide	**60**	60" wide	**72**	72" wide

NOTES

» Self mount, Vertical mount and Top mount Cable Ducts can be cut to size in the field.

» UL recognized, CSA certified. PVC duct carries a UL flammability rating of 94V-0.

Product Number	Description	Height		Width		Depth		Weight	
		in.	[mm]	in.	[mm]	in.	[mm]	lb.	[kg]
CDF24BK	Frame-mount cable duct	2	51	24	610	4	102	4	2
CDF30BK	Frame-mount cable duct	2	51	30	762	4	102	5	2
CDF36BK	Frame-mount cable duct	2	51	36	914	4	102	6	3
CDF48BK	Frame-mount cable duct	2	51	48	1219	4	102	8	4
CDF60BK	Frame-mount cable duct	2	51	60	1524	4	102	10	5
CDF72BK	Frame-mount cable duct	2	51	72	1829	4	102	12	5
CDFV72BK	Vertical mount cable duct	2	51	72	1829	4	102	5	2
CDS72BK	Self mount cable duct	2	51	72	1829	4	102	5	2
CDC72BK	Top mount cable duct	2	51	72	1829	4	102	5	2

Rev 01/06/21

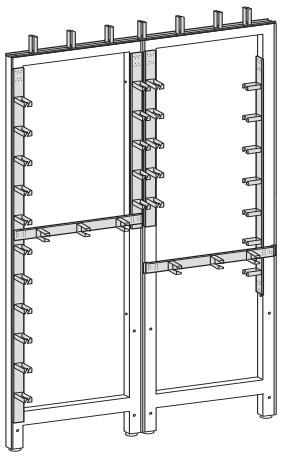

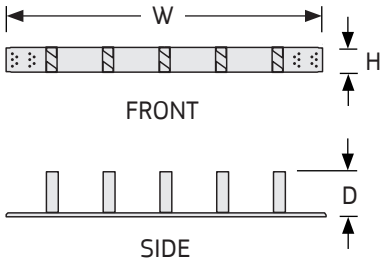

CABLE RING DUCTS

- Cable Ring Ducts provide easy access to bulk cable management.
- Openings on each ring allow for easy access and clearance of cables while the angle of the opening restrains the cables once in place.
- Ducts mount horizontally or vertically to frames on hanger clips.
- Ducts mount vertically on the inside or horizontally on the top of 80" and 96" high UltraFrames to captivators.
- One 48" Cable Ring Duct per side mounts to captivators inside 80" high UltraFrames. One 24" and one 48", two 36" or one 72" Cable Ring Duct per side mounts to captivators inside 96" high UltraFrames.
- Top captivators or knockouts accommodate Cable Ring Ducts the same width as the respective frames or run of frames. For example, a 48" Cable Ring Duct can be mounted across the top of a 48" wide frame or across the top of two adjacent 24" wide frames.
- Finish is Black Texture.

NOTES

» Two vertical Cable Ring Ducts can mount adjacently at the juncture of two frames.

» Special hole patterns allow the ends of perpendicularly mounted Cable Ring Ducts and 12 Port Data Chases to stack sharing common frame space. 60" and 72" Cable Ring Ducts have a third set of holes near the center of their length allowing for this perpendicular stacking.

How to Specify

Step 1. Product Number

CRD

Step 2. Width

24	24" wide	**30**	30" wide	**36**	36" wide
48	48" wide	**60**	60" wide	**72**	72" wide

Product Number	Description	Height		Width		Depth		Weight	
		in.	[mm]	in.	[mm]	in.	[mm]	lb.	[kg]
CRD24BT	Cable ring duct, 3 rings	2	51	24	610	3	76	2	1
CRD30BT	Cable ring duct, 4 rings	2	51	30	762	3	76	3	1
CRD36BT	Cable ring duct, 5 rings	2	51	36	914	3	76	3	1
CRD48BT	Cable ring duct, 7 rings	2	51	48	1219	3	76	4	2
CRD60BT	Cable ring duct, 9 rings	2	51	60	1524	3	76	5	2
CRD72BT	Cable ring duct, 11 rings	2	51	72	1829	3	76	6	3

Rev 01/06/21

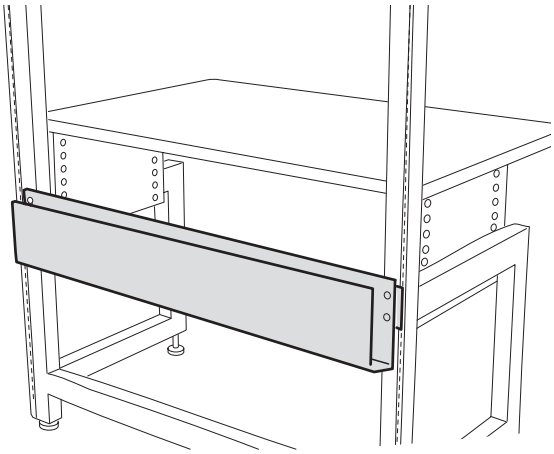

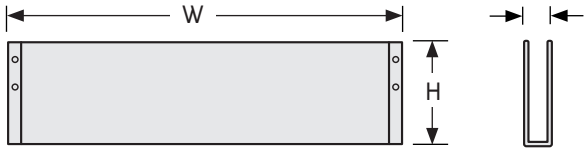

CABLE TRAYS, FRAME MOUNT

- Cable Trays provide horizontal cable management in workstations.
- Trays mount to frames and adjust vertically in 1" increments.
- Steel trays have 45° angled ends to allow for corner configurations and bottom openings for cable access.

How to Specify

Step 1. Product Number

CTF

Step 2. Width

24	24" wide	**30**	30" wide	**36**	36" wide
48	48" wide	**60**	60" wide	**72**	72" wide

Step 3. Paint Color Code

STANDARD

AW	Arctic White	**GL**	Grey Light Smooth
AS	Argent Silver	**GT**	Grey Light Texture
BK	Black	**NW**	Neutral White
BT	Black Texture	**ST**	Sand Texture

Product Number	Description	Height		Width		Depth		Weight	
		in.	[mm]	in.	[mm]	in.	[mm]	lb.	[kg]
CTF24	Cable tray, frame mount	8	203	24	610	2 ¾	70	5	2
CTF30	Cable tray, frame mount	8	203	30	762	2 ¾	70	6	3
CTF36	Cable tray, frame mount	8	203	36	914	2 ¾	70	8	4
CTF48	Cable tray, frame mount	8	203	48	1219	2 ¾	70	10	5
CTF60	Cable tray, frame mount	8	203	60	1524	2 ¾	70	12	5
CTF72	Cable tray, frame mount	8	203	72	1829	2 ¾	70	14	6

Rev 04/01/19

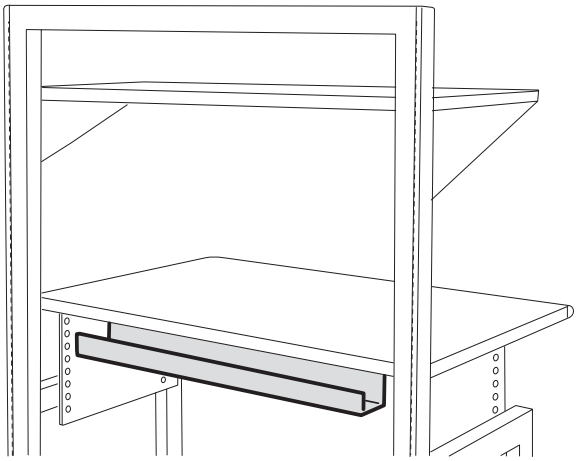

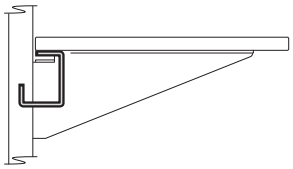

ULTRAFRAME

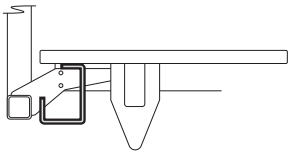

ERGOSTAT

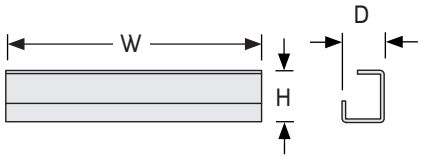

CABLE TRAYS, UNIVERSAL

- Cable Trays provide horizontal storage for electrical cords and communication cabling below Ultra Surfaces and Laminate Corner Shelves.
- Trays fasten to the bottom of surfaces and can be positioned to the centerline of UltraFrames or mounted flush to the back of surfaces for applications with ErgoStat™ Riser Frames and Table Bases.
- Finish is Black Texture.

NOTES

» Use with:

CTUABT	24" frames, 36" Table Bases and ErgoStats
CTUBBT	30" frames
CTUCBT	36" frames, 48" Table Bases and ErgoStats
CTUDBT	48" frames, 60" Table Bases and ErgoStats
CTUEBT	60" frames, 72" Table Bases and ErgoStats

» Cable Trays can be used together with Surface Back Stops, sold separately; see page 4.30.

» Cable Trays cannot be mounted flush to the back of Laminate Corner Shelves.

How to Specify

Step 1. Product Number

CTU

Step 2. Width

See notes for width options.

Product Number	Description	Height		Width		Depth		Weight	
		in.	[mm]	in.	[mm]	in.	[mm]	lb.	[kg]
CTUABT	Universal surface mount	4 ¾	121	17 ½	445	3 ¾	95	4	2
CTUBBT	Universal surface mount	4 ¾	121	23 ½	597	3 ¾	95	5	2
CTUCBT	Universal surface mount	4 ¾	121	29 ½	749	3 ¾	95	6	3
CTUDBT	Universal surface mount	4 ¾	121	41 ½	1054	3 ¾	95	8	4
CTUEBT	Universal surface mount	4 ¾	121	53 ½	1359	3 ¾	95	10	5

Rev 11/23/26

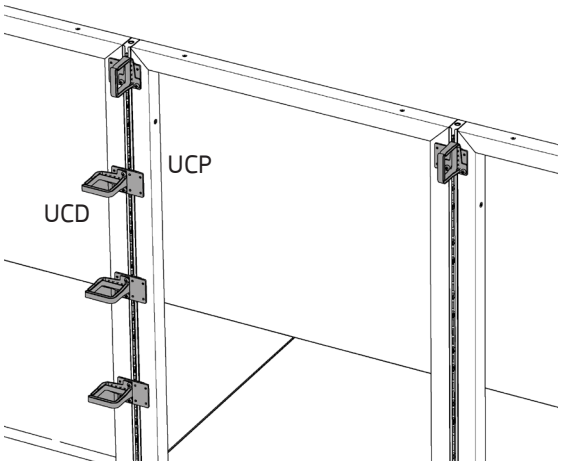

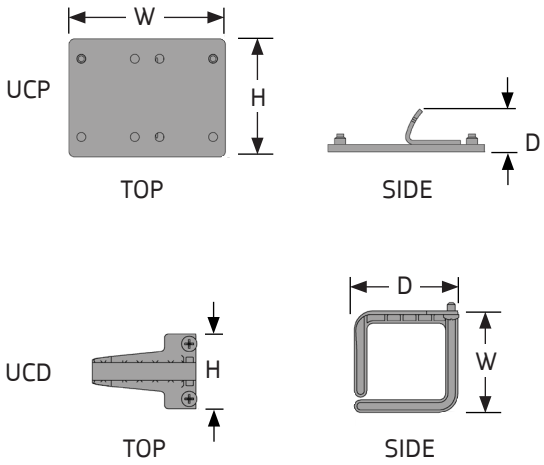

UNICLIPS AND D-RINGS

Uniclips

- Uniclips provide for the mounting of D-rings and other components containing a 1¾" spaced mounting hole pattern. This hole pattern lines up with EIA units of standard racks.
- Components with a single mounting hole such as conduit rings can also be mounted.
- Steel plates are tapped for ¼ -20 screws and the hole pattern allows for components to be mounted in a variety of locations. Integral clips hang in 1" increments on frames and can be spaced according to user requirements.
- Finish is Black.

D-rings

- D-rings mount to Uniclips in several different locations providing vertical or horizontal cable management.
- Plastic rings can be mounted on the left or right sides of the Uniclips providing vertical cable management on both the left and right sides for double vertical runs of cables.
- Rings can be mounted on the top or bottom of the Uniclips providing frame-to-frame horizontal cable management on both the top and bottom for double horizontal runs of cables.
- Interior dimensions of the 1" D-ring are 1¼" wide by 2½" deep and the 2" D-ring are 2½" wide by 2½" deep.
- Gap in ring shifts aside for easy access to cables.
- Finish is Black.

How to Specify

Step 1. Product Number

UCP	Uniclip
UCD1	D-ring 1"
UCD2	D-ring 2"

Step 2. Paint Color Code

BK	Black

NOTES

» D-rings can also be mounted directly to the EIA units of Rack Modules.

Product Number	Description	Height		Width		Depth		Weight	
		in.	[mm]	in.	[mm]	in.	[mm]	lb.	[kg]
UCPBK	Uniclip, 5 pack	2 ⅝	67	3 ½	89	½	13	3	1
UCD1BK	1-inch D-ring, 5 pack	2 ⅜	60	2	51	3 ¼	83	¼	0.1
UCD2BK	2-inch D-ring, 5 pack	2 ⅜	60	3 ¼	83	3 ¼	83	½	0.2

Rev 01/29/09

LAB PRODUCTS

Mobile Base Cabinets, Double Drawer & Door 10.2
Fixed Base Cabinets, Double Drawer & Door 10.3
Mobile Base Cabinets, Single Drawer & Door 10.4
Fixed Base Cabinets, Single Drawer & Door 10.5
Suspended Base Cabinets, Drawer/Door 10.6
Mobile Base Cabinets, Single Door 10.7
Fixed Base Cabinets, Single Door 10.8
Mobile Base Cabinets, Double Door 10.9
Fixed Base Cabinets, Double Door 10.10
Suspended Base Cabinets, Single & Dbl. Door 10.11
Fixed Base Cabinets, Open Unit 10.12
Base Cabinets, Sitting Height, Double Drawer 10.13
Base Cabinets, Sitting Height, 3-Drawer 10.14
Suspended Base Cabinets, Drawers 10.15
4-Legged Table Cabinet Mounting Brackets 10.16
Base Cabinets, Standing Height 3-Drawer 10.17
Base Cabinets, Standing Height 4-Drawer 10.18
Bottle Drawer Cabinets 10.19
Sink Base Cabinet, Standard 10.20
Sink Base Cabinet, ADA, Standard 10.21
Sink Base Cabinet, ADA, Door To Floor 10.22
Wall Cases, Glass Doors 10.23
Wall Cases, Solid Doors 10.24
Floor Cases 10.25
Wall Strips 10.26
Cantilever Brackets 10.27
Lab Height B Supports 10.28
Lab Legs 10.29
Lab Legs, ADA 10.30
Adjacent Brackets 10.31
Surface Reinforcement Bars 10.32
Phenolic Lab Surfaces 10.33
Epoxy Lab Surfaces 10.34
Greenstone Epoxy Lab Surfaces 10.35
Lab Leg Panels 10.36
Lab Leg Panels, ADA 10.37
Lab Cabinet Fillers 10.38
Lab Leg Fillers 10.40
Sloped Top Covers 10.41
Drain Board, Frame-Mount 10.42
Drain Board, Wall-Mount 10.43
Sink, Undermount 10.44
Sink, Drop-In 10.45
Sink Faucets, Undermount and Drop-In 10.46
Eyewash Stations 10.47
Ball Valves 10.48
Vertical Utility Chase, ErgoStat Riser Frame 10.49
Vertical Utility Chase, UltraFrame 10.50
Ceiling Service Panel, Quick Disconnect 10.51
Sink, Shroud 10.52
Sink, ADA Shroud Sinks and Surfaces 10.53

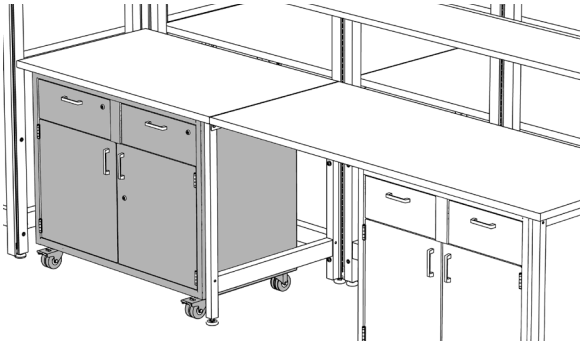

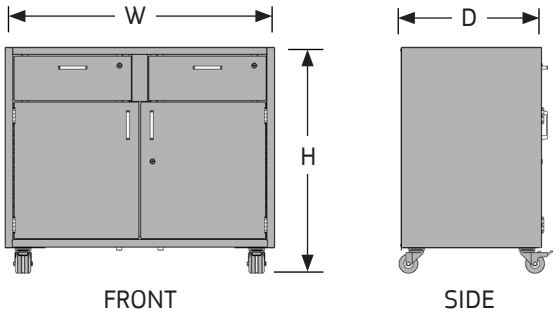

MOBILE BASE CABINETS, DOUBLE DRAWER & DOOR

- Built to SEFA standards, Cabinets are constructed of welded 18 and 20 gauge steel with a chemical resistant epoxy powder coat paint finish.
- Drawers have full-extension ball bearing, plated drawer slides.
- Doors have 5-knuckle stainless steel institutional type hinges.
- Sound deadened doors and drawers have "double pan" construction with a bar pull.
- A removable bottom pan and a single full-depth adjustable shelf is included with each cabinet. Additional shelves available; consult factory.
- Available with or without locks. Locking cabinets with multiple doors/drawers per unit will have the same key number per unit. Individual units will be keyed randomly and differently from the other. Contact factory for other keying options. Available key numbers are LL226 thru LL327.
- Mobile units have a solid steel top and back with two front total lock casters and two rear swivel casters.

NOTES

» Base Cabinets can be used in conjunction with UltraFrame, Lab Legs and support brackets; see pages 2.2, 10.27-10.29.

» Recessed pulls available; consult factory.

How to Specify

Step 1. Product Number

LUCB Base Cabinet

Step 2. Height

29 29" high **35** 35" high

Step 3. Width

30 30" wide **36** 36" wide **42** 42" wide **48** 48" wide

Step 4. Casters, Drawer/Door, Pull Type

C2DB Casters, Double Drawer and Door

Step 5. Locking/Non-Locking

N Non-Locking **L** Locking

Step 6. Paint Color Code

BK Black
GL Grey Light Smooth
NW Neutral White

Product Number	Description	Height		Width		Depth		Weight	
		in.	[mm]	in.	[mm]	in.	[mm]	lb.	[kg]
LUCB2930C2DBN	Sitting height, non-locking	29	737	30	762	21 ⅞	556	116	52.6
LUCB2936C2DBN	Sitting height, non-locking	29	737	36	914	21 ⅞	556	126	57.2
LUCB2942C2DBN	Sitting height, non-locking	29	737	42	1067	21 ⅞	556	136	61.7
LUCB2948C2DBN	Sitting height, non-locking	29	737	48	1219	21 ⅞	556	151	68.5
LUCB3530C2DBN	Standing height, non-locking	35	889	30	762	21 ⅞	556	146	66.2
LUCB3536C2DBN	Standing height, non-locking	35	889	36	914	21 ⅞	556	156	70.8
LUCB3542C2DBN	Standing height, non-locking	35	889	42	1067	21 ⅞	556	171	77.6
LUCB3548C2DBN	Standing height, non-locking	35	889	48	1219	21 ⅞	556	181	82.1
LUCB2930C2DBL	Sitting height, locking	29	737	30	762	21 ⅞	556	116	52.6
LUCB2936C2DBL	Sitting height, locking	29	737	36	914	21 ⅞	556	126	57.2
LUCB2942C2DBL	Sitting height, locking	29	737	42	1067	21 ⅞	556	136	61.7
LUCB2948C2DBL	Sitting height, locking	29	737	48	1219	21 ⅞	556	151	68.5
LUCB3530C2DBL	Standing height, locking	35	889	30	762	21 ⅞	556	146	66.2
LUCB3536C2DBL	Standing height, locking	35	889	36	914	21 ⅞	556	156	70.8
LUCB3542C2DBL	Standing height, locking	35	889	42	1067	21 ⅞	556	171	77.6
LUCB3548C2DBL	Standing height, locking	35	889	48	1219	21 ⅞	556	181	82.1

Rev 01/16/20

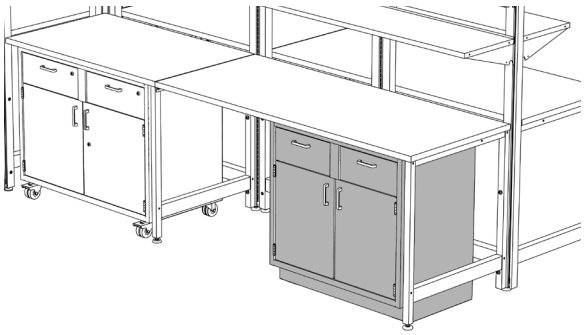

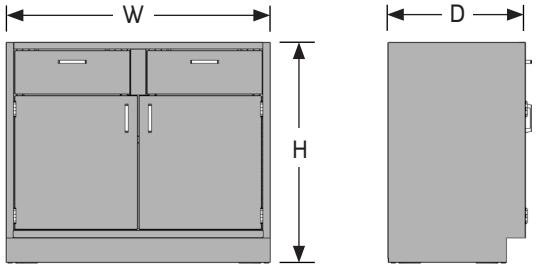

FIXED BASE CABINETS, DOUBLE DRAWER & DOOR

- Built to SEFA standards, Cabinets are constructed of welded 18 and 20 gauge steel with a chemical resistant epoxy powder coat paint finish.
- Drawers have full-extension ball bearing, plated drawer slides.
- Doors have 5-knuckle stainless steel institutional type hinges.
- Sound deadened doors and drawers have "double pan" construction with a bar pull.
- A removable bottom pan and a single full-depth adjustable shelf is included with each cabinet. Additional shelves; consult factory.
- Available with or without locks. Locking cabinets with multiple doors/ drawers per unit will have the same key number per unit. Individual units will be keyed randomly and differently from the other. Contact factory for other keying options. Available key numbers are LL226 thru LL327.
- Stationary units are open on top, with a removable back panel and include leveling glides.

NOTES

» Base cabinets can be used in conjunction with UltraFrame, Lab Legs and support brackets; see pages 2.2, 10.27-10.29.

» Recessed pulls available; consult factory.

How to Specify

Step 1. Product Number

LUCB Base Cabinet

Step 2. Height

29 29" high **35** 35" high

Step 3. Width

30 30" wide **36** 36" wide **42** 42" wide
48 48" wide

Step 4. Glide, Drawer/Door, Pull Type

G2DB Glide, Double Drawer and Door

Step 5. Locking/Non-Locking

N Non-Locking **L** Locking

Step 6. Paint Color Code

BK Black
GL Grey Light Smooth
NW Neutral White

Product Number	Description	Height		Width		Depth		Weight	
		in.	[mm]	in.	[mm]	in.	[mm]	lb.	[kg]
LUCB2930G2DBN	Sitting height, non-locking	29	737	30	762	21 ⅞	556	110	49.9
LUCB2936G2DBN	Sitting height, non-locking	29	737	36	914	21 ⅞	556	120	54.4
LUCB2942G2DBN	Sitting height, non-locking	29	737	42	1067	21 ⅞	556	141	64.0
LUCB2948G2DBN	Sitting height, non-locking	29	737	48	1219	21 ⅞	556	145	65.8
LUCB3530G2DBN	Standing height, non-locking	35	889	30	762	21 ⅞	556	140	63.5
LUCB3536G2DBN	Standing height, non-locking	35	889	36	914	21 ⅞	556	150	68.0
LUCB3542G2DBN	Standing height, non-locking	35	889	42	1067	21 ⅞	556	165	74.8
LUCB3548G2DBN	Standing height, non-locking	35	889	48	1219	21 ⅞	556	175	79.4
LUCB2930G2DBL	Sitting height, locking	29	737	30	762	21 ⅞	556	110	49.9
LUCB2936G2DBL	Sitting height, locking	29	737	36	914	21 ⅞	556	120	54.4
LUCB2942G2DBL	Sitting height, locking	29	737	42	1067	21 ⅞	556	141	64.0
LUCB2948G2DBL	Sitting height, locking	29	737	48	1219	21 ⅞	556	145	65.8
LUCB3530G2DBL	Standing height, locking	35	889	30	762	21 ⅞	556	140	63.5
LUCB3536G2DBL	Standing height, locking	35	889	36	914	21 ⅞	556	150	68.0
LUCB3542G2DBL	Standing height, locking	35	889	42	1067	21 ⅞	556	165	74.8
LUCB3548G2DBL	Standing height, locking	35	889	48	1219	21 ⅞	556	170	77.1

Rev 01/16/20

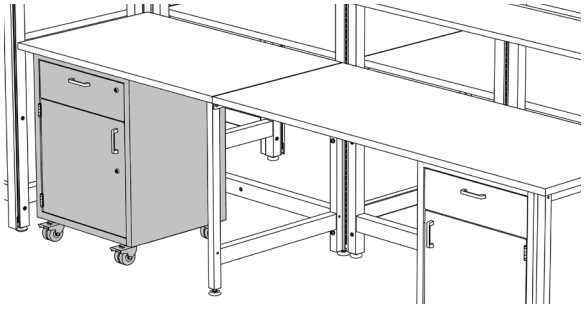

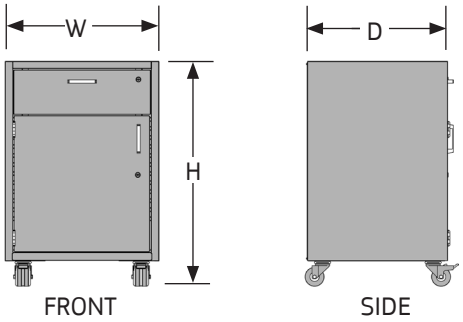

MOBILE BASE CABINETS, SINGLE DRAWER & DOOR

- Built to SEFA standards, Cabinets are constructed of welded 18 and 20 gauge steel with a chemical resistant epoxy powder coat paint finish.
- Drawers have full-extension ball bearing, plated drawer slides.
- Doors have 5-knuckle stainless steel institutional type hinges.
- Sound deadened doors and drawers have "double pan" construction with a bar pull.
- A removable bottom pan and a single full-depth adjustable shelf is included with each cabinet. Additional shelves available, consult factory.
- Available with or without locks. Locking cabinets with multiple doors/ drawers per unit will have the same key number per unit. Individual units will be keyed randomly and differently from the other. Contact factory for other keying options. Available key numbers are LL226 thru LL327.
- Mobile units have a solid steel top and back with two front total lock casters and two rear swivel casters.

NOTES

» Base cabinets can be used in conjunction with UltraFrame, Lab Legs and support brackets; see pages 2.2, 10.27-10.29.

» Recessed pulls available; consult factory.

How to Specify

Step 1. Product Number

LUCB Base Cabinet

Step 2. Height

29 29" high **35** 35" high

Step 3. Width

18 18" wide **24** 24" wide

Step 4. Casters, Drawer/Door Combo.

C1 Casters, Single Drawer and Door

Step 5. Hinge Location, Pull Type

LB Left, Bar **RB** Right, Bar

Step 6. Locking/Non-Locking

N Non-Locking **L** Locking

Step 7. Paint Color Code

BK Black
GL Grey Light Smooth
NW Neutral White

Product Number	Description	Height		Width		Depth		Weight	
		in.	[mm]	in.	[mm]	in.	[mm]	lb.	[kg]
LUCB2918C1LBN	Sitting height, left hinged, non-locking	29	737	18	457	21 7/8	556	86	39.0
LUCB2918C1RBN	Sitting height, right hinged, non-locking	29	737	18	457	21 7/8	556	86	39.0
LUCB2924C1LBN	Sitting height, left hinged, non-locking	29	737	24	610	21 7/8	556	96	43.5
LUCB2924C1RBN	Sitting height, right hinged, non-locking	29	737	24	610	21 7/8	556	96	43.5
LUCB3518C1LBN	Standing height, left hinged, non-locking	35	889	18	457	21 7/8	556	101	45.8
LUCB3518C1RBN	Standing height, right hinged, non-locking	35	889	18	457	21 7/8	556	101	45.8
LUCB3524C1LBN	Standing height, left hinged, non-locking	35	889	24	610	21 7/8	556	111	50.3
LUCB3524C1RBN	Standing height, right hinged, non-locking	35	889	24	610	21 7/8	556	111	50.3
LUCB2918C1LBL	Sitting height, left hinged, locking	29	737	18	457	21 7/8	556	86	39.0
LUCB2918C1RBL	Sitting height, right hinged, locking	29	737	18	457	21 7/8	556	86	39.0
LUCB2924C1LBL	Sitting height, left hinged, locking	29	737	24	610	21 7/8	556	96	43.5
LUCB2924C1RBL	Sitting height, right hinged, locking	29	737	24	610	21 7/8	556	96	43.5
LUCB3518C1LBL	Standing height, left hinged, locking	35	889	18	457	21 7/8	556	101	45.8
LUCB3518C1RBL	Standing height, right hinged, locking	35	889	18	457	21 7/8	556	101	45.8
LUCB3524C1LBL	Standing height, left hinged, locking	35	889	24	610	21 7/8	556	111	50.3
LUCB3524C1RBL	Standing height, right hinged, locking	35	889	24	610	21 7/8	556	111	50.3

Rev 01/16/20

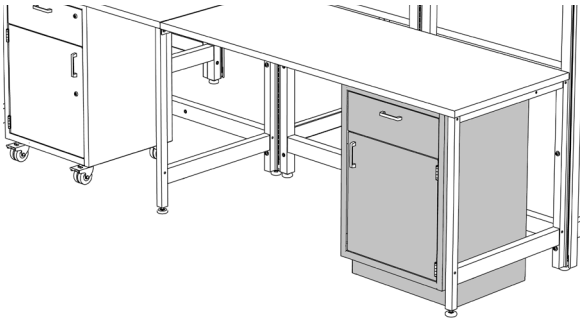

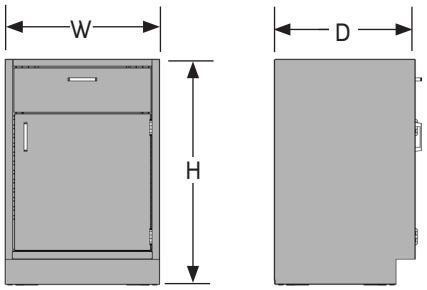

FIXED BASE CABINETS, SINGLE DRAWER & DOOR

- Built to SEFA standards, Cabinets are constructed of welded 18 and 20 gauge steel with a chemical resistant epoxy powder coat paint finish.
- Drawers have full-extension ball bearing, plated drawer slides.
- Doors have 5-knuckle stainless steel institutional type hinges.
- Sound deadened doors and drawers have "double pan" construction with a bar pull.
- A removable bottom pan and a single full-depth adjustable shelf is included with each cabinet. Additional shelves available, consult factory.
- Available with or without locks. Locking cabinets with multiple doors/ drawers per unit will have the same key number per unit. Individual units will be keyed randomly and differently from the other. Contact factory for other keying options. Available key numbers are LL226 thru LL327.
- Stationary units are open on top, with a removable back panel and include leveling glides.

NOTES

» Base cabinets can be used in conjunction with UltraFrame, Lab Legs and support brackets; see pages 2.2, 10.27-10.29.

» Recessed pulls available; consult factory.

How to Specify

Step 1. Product Number

LUCB Base Cabinet

Step 2. Height

29 29" high **35** 35" high

Step 3. Width

18 18" wide **24** 24" wide

Step 4. Glide, Drawer/Door Combo.

G1 Glide Base, Single Drawer and Door

Step 5. Hinge Location, Pull Type

LB Left, Bar **RB** Right, Bar

Step 6. Locking/Non-Locking

N Non-Locking **L** Locking

Step 7. Paint Color Code

BK Black
GL Grey Light Smooth
NW Neutral White

Product Number	Description	Height		Width		Depth		Weight	
		in.	[mm]	in.	[mm]	in.	[mm]	lb.	[kg]
LUCB2918G1LBN	Sitting height, left hinged, non-locking	29	737	18	457	21 ⅞	556	80	36.3
LUCB2918G1RBN	Sitting height, right hinged, non-locking	29	737	18	457	21 ⅞	556	80	36.3
LUCB2924G1LBN	Sitting height, left hinged, non-locking	29	737	24	610	21 ⅞	556	90	40.8
LUCB2924G1RBN	Sitting height, right hinged, non-locking	29	737	24	610	21 ⅞	556	90	40.8
LUCB3518G1LBN	Standing height, left hinged, non-locking	35	889	18	457	21 ⅞	556	95	43.1
LUCB3518G1RBN	Standing height, right hinged, non-locking	35	889	18	457	21 ⅞	556	95	43.1
LUCB3524G1LBN	Standing height, left hinged, non-locking	35	889	24	610	21 ⅞	556	105	47.6
LUCB3524G1RBN	Standing height, right hinged, non-locking	35	889	24	610	21 ⅞	556	105	47.6
LUCB2918G1LBL	Sitting height, left hinged, locking	29	737	18	457	21 ⅞	556	80	36.3
LUCB2918G1RBL	Sitting height, right hinged, locking	29	737	18	457	21 ⅞	556	80	36.3
LUCB2924G1LBL	Sitting height, left hinged, locking	29	737	24	610	21 ⅞	556	90	40.8
LUCB2924G1RBL	Sitting height, right hinged, locking	29	737	24	610	21 ⅞	556	90	40.8
LUCB3518G1LBL	Standing height, left hinged, locking	35	889	18	457	21 ⅞	556	95	43.1
LUCB3518G1RBL	Standing height, right hinged, locking	35	889	18	457	21 ⅞	556	95	43.1
LUCB3524G1LBL	Standing height, left hinged, locking	35	889	24	610	21 ⅞	556	105	47.6
LUCB3524G1RBL	Standing height, right hinged, locking	35	889	24	610	21 ⅞	556	105	47.6

Rev 01/16/20

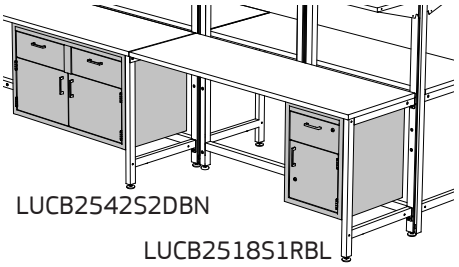

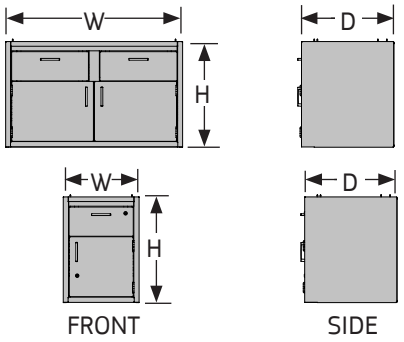

SUSPENDED BASE CABINETS, DRAWER/DOOR

- Suspended Base Cabinets can be hung from the underside of surfaces and 4-Legged Table Cabinet Mounting Brackets.
- Built to SEFA standards, Cabinets are constructed of welded 18 and 20 gauge steel with a chemical resistant epoxy powder coat paint finish.
- Drawers have full-extension ball bearing, plated drawer slides.
- Doors have 5-knuckle stainless steel institutional type hinges.
- Sound deadened doors and drawers have "double pan" construction with a bar pull.
- A removable bottom pan and a single full-depth adjustable shelf is included with each cabinet. Additional shelves available; consult factory.
- Available with or without locks. Locking cabinets with multiple doors/drawers per unit will have the same key number per unit. Individual units will be keyed randomly and differently from the other. Contact factory for other keying options. Available key numbers are LL226 thru LL327.
- Units are open on top and have a solid steel back panel.

NOTES

» Load capacity (includes cabinet and content) cannot exceed 500 lbs. Load capacity of the suspended cabinet does not supercede support component load rating.
» The suspended component(s) reduces the surface load capacity by an amount equal to the suspended component and its contents.
» Recessed pulls available; consult factory.
» 4-Legged Table Cabinet Mounting Brackets sold separately; see page 10.16.

How to Specify

Step 1. Product Number

LUCB Base Cabinet

Step 2. Height

25 25" high

Step 3. Width

18 18" wide **24** 24" wide **30** 30" wide
36 36" wide **42** 42" wide **48** 48" wide

Step 4. Suspended, Drawer/Door Combo.

S1 Single **S2** Double

Step 5. Hinge Location, Pull Type

LB Left, Bar **RB** Right, Bar **D** Double Door

Step 6. Locking/Non-Locking

N Non-Locking **L** Locking

Step 7. Paint Color Code

BK Black
GL Grey Light Smooth
NW Neutral White

Product Number	Description	Height		Width		Depth		Weight	
		in.	[mm]	in.	[mm]	in.	[mm]	lb.	[kg]
LUCB2518S1LBN	Suspended, left hinged, non-locking	25	635	18	457	21 7/8	556	86	39.0
LUCB2518S1RBN	Suspended, right hinged, non-locking	25	635	18	457	21 7/8	556	86	39.0
LUCB2524S1LBN	Suspended, left hinged, non-locking	25	635	24	610	21 7/8	556	111	50.3
LUCB2524S1RBN	Suspended, right hinged, non-locking	25	635	24	610	21 7/8	556	111	50.3
LUCB2518S1LBL	Suspended, left hinged, locking	25	635	18	457	21 7/8	556	96	43.5
LUCB2518S1RBL	Suspended, right hinged, locking	25	635	18	457	21 7/8	556	96	43.5
LUCB2524S1LBL	Suspended, left hinged, locking	25	635	24	610	21 7/8	556	101	45.8
LUCB2524S1RBL	Suspended, right hinged, locking	25	635	24	610	21 7/8	556	101	45.8
LUCB2530S2DBN	Suspended, double door, non-locking	25	635	30	762	21 7/8	556	110	49.9
LUCB2536S2DBN	Suspended, double door, non-locking	25	635	36	914	21 7/8	556	120	54.4
LUCB2542S2DBN	Suspended, double door, non-locking	25	635	42	1067	21 7/8	556	141	64.0
LUCB2548S2DBN	Suspended, double door, non-locking	25	635	48	1219	21 7/8	556	151	68.5
LUCB2530S2DBL	Suspended, double door, locking	25	635	30	762	21 7/8	556	110	49.9
LUCB2536S2DBL	Suspended, double door, locking	25	635	36	914	21 7/8	556	120	54.4
LUCB2542S2DBL	Suspended, double door, locking	25	635	42	1067	21 7/8	556	141	64.0
LUCB2548S2DBL	Suspended, double door, locking	25	635	48	1219	21 7/8	556	151	68.5

Rev 01/16/20

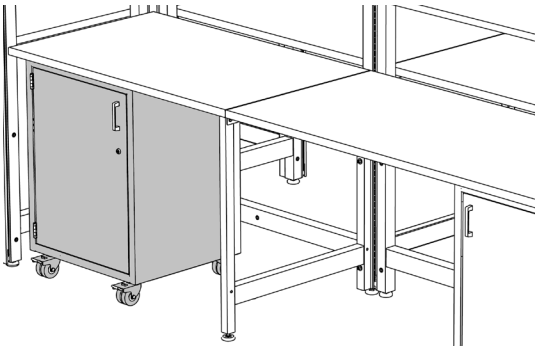

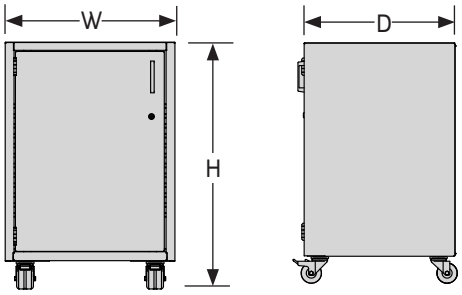

MOBILE BASE CABINETS, SINGLE DOOR

- Built to SEFA standards, Cabinets are constructed of welded 18 and 20 gauge steel with a chemical resistant epoxy powder coat paint finish.
- Doors have 5-knuckle stainless steel institutional type hinges.
- Sound deadened doors have "double pan" construction with a bar pull.
- A removable bottom pan and a single full-depth adjustable shelf is included with each cabinet. Additional shelves available; consult factory.
- Available with or without locks. Locking cabinets with multiple doors/ drawers per unit will have the same key number per unit. Individual units will be keyed randomly and differently from the other. Contact factory for other keying options. Available key numbers are LL226 thru LL327.
- Mobile units have a solid steel top and back with two front total lock casters and two rear swivel casters.

NOTES

» Base cabinets can be used in conjunction with UltraFrame, Lab Legs and support brackets; see pages 2.2 - 2.3 and 10.25 - 10.27.

» Recessed pulls available; consult factory.

How to Specify

Step 1. Product Number

LUCB Base Cabinet

Step 2. Height

29 29" high **35** 35" high

Step 3. Width

18 18" wide **24** 24" wide

Step 4. Casters, Door

CO Casters, Single Door

Step 5. Hinge Location, Pull Type

LB Left, Bar **RB** Right, Bar

Step 6. Locking/Non-Locking

N Non-Locking **L** Locking

Step 7. Paint Color Code

BK Black
GL Grey Light Smooth
NW Neutral White

Product Number	Description	Height		Width		Depth		Weight	
		in.	[mm]	in.	[mm]	in.	[mm]	lb.	[kg]
LUCB2918C0LBN	Sitting height, left hinged, non-locking	29	737	18	457	21 7/8	556	81	36.7
LUCB2918C0RBN	Sitting height, right hinged, non-locking	29	737	18	457	21 7/8	556	81	36.7
LUCB2924C0LBN	Sitting height, left hinged, non-locking	29	737	24	610	21 7/8	556	91	41.3
LUCB2924C0RBN	Sitting height, right hinged, non-locking	29	737	24	610	21 7/8	556	91	41.3
LUCB3518C0LBN	Standing height, left hinged, non-locking	35	889	18	457	21 7/8	556	91	41.3
LUCB3518C0RBN	Standing height, right hinged, non-locking	35	889	18	457	21 7/8	556	91	41.3
LUCB3524C0LBN	Standing height, left hinged, non-locking	35	889	24	610	21 7/8	556	101	45.8
LUCB3524C0RBN	Standing height, right hinged, non-locking	35	889	24	610	21 7/8	556	101	45.8
LUCB2918C0LBL	Sitting height, left hinged, locking	29	737	18	457	21 7/8	556	81	36.7
LUCB2918C0RBL	Sitting height, right hinged, locking	29	737	18	457	21 7/8	556	81	36.7
LUCB2924C0LBL	Sitting height, left hinged, locking	29	737	24	610	21 7/8	556	91	41.3
LUCB2924C0RBL	Sitting height, right hinged, locking	29	737	24	610	21 7/8	556	91	41.3
LUCB3518C0LBL	Standing height, left hinged, locking	35	889	18	457	21 7/8	556	91	41.3
LUCB3518C0RBL	Standing height, right hinged, locking	35	889	18	457	21 7/8	556	91	41.3
LUCB3524C0LBL	Standing height, left hinged, locking	35	889	24	610	21 7/8	556	101	45.8
LUCB3524C0RBL	Standing height, right hinged, locking	35	889	24	610	21 7/8	556	101	45.8

Rev 01/16/20

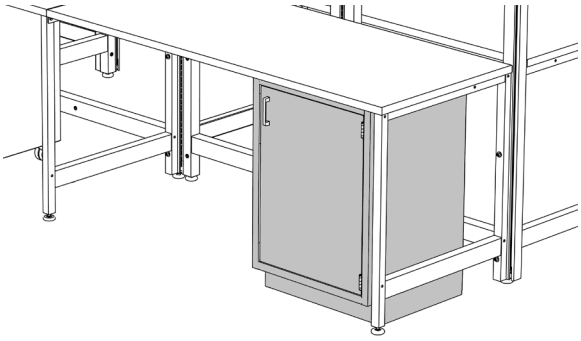

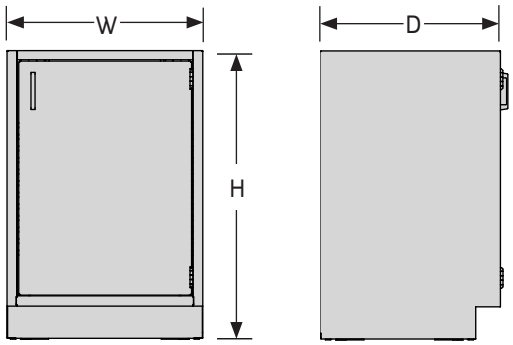

FIXED BASE CABINETS, SINGLE DOOR

- Built to SEFA standards, Cabinets are constructed of welded 18 and 20 gauge steel with a chemical resistant epoxy powder coat paint finish.
- Doors have 5-knuckle stainless steel institutional type hinges.
- Sound deadened doors have "double pan" construction with a bar pull.
- A removable bottom pan and a single full-depth adjustable shelf is included with each cabinet. Additional shelves available; consult factory.
- Available with or without locks. Locking cabinets with multiple doors/ drawers per unit will have the same key number per unit. Individual units will be keyed randomly and differently from the other. Contact factory for other keying options. Available key numbers are LL226 thru LL327.
- Stationary units are open on top, with a removable back panel and include leveling glides.

NOTES

» Base cabinets can be used in conjunction with UltraFrame, Lab Legs and support brackets; see pages 2.2 - 2.3 and 10.25 - 10.27.

» Recessed pulls available; consult factory.

How to Specify

Step 1. Product Number

LUCB Base Cabinet

Step 2. Height

29 29" high **35** 35" high

Step 3. Width

18 18" wide **24** 24" wide

Step 4. Glide, Door

GO Glide, Single Door

Step 5. Hinge Location, Pull Type

LB Left, Bar **RB** Right, Bar

Step 6. Locking/Non-Locking

N Non-Locking **L** Locking

Step 7. Paint Color Code

BK Black
GL Grey Light Smooth
NW Neutral White

Product Number	Description	Height		Width		Depth		Weight	
		in.	[mm]	in.	[mm]	in.	[mm]	lb.	[kg]
LUCB2918G0LBN	Sitting height, left hinged, non-locking	29	737	18	457	21 7/8	556	75	34.0
LUCB2918G0RBN	Sitting height, right hinged, non-locking	29	737	18	457	21 7/8	556	75	34.0
LUCB2924G0LBN	Sitting height, left hinged, non-locking	29	737	24	610	21 7/8	556	85	38.6
LUCB2924G0RBN	Sitting height, right hinged, non-locking	29	737	24	610	21 7/8	556	85	38.6
LUCB3518G0LBN	Standing height, left hinged, non-locking	35	889	18	457	21 7/8	556	85	38.6
LUCB3518G0RBN	Standing height, right hinged, non-locking	35	889	18	457	21 7/8	556	85	38.6
LUCB3524G0LBN	Standing height, left hinged, non-locking	35	889	24	610	21 7/8	556	95	43.1
LUCB3524G0RBN	Standing height, right hinged, non-locking	35	889	24	610	21 7/8	556	95	43.1
LUCB2918G0LBL	Sitting height, left hinged, locking	29	737	18	457	21 7/8	556	75	34.0
LUCB2918G0RBL	Sitting height, right hinged, locking	29	737	18	457	21 7/8	556	75	34.0
LUCB2924G0LBL	Sitting height, left hinged, locking	29	737	24	610	21 7/8	556	85	38.6
LUCB2924G0RBL	Sitting height, right hinged, locking	29	737	24	610	21 7/8	556	85	38.6
LUCB3518G0LBL	Standing height, left hinged, locking	35	889	18	457	21 7/8	556	85	38.6
LUCB3518G0RBL	Standing height, right hinged, locking	35	889	18	457	21 7/8	556	85	38.6
LUCB3524G0LBL	Standing height, left hinged, locking	35	889	24	610	21 7/8	556	95	43.1
LUCB3524G0RBL	Standing height, right hinged, locking	35	889	24	610	21 7/8	556	95	43.1

Rev 01/16/20

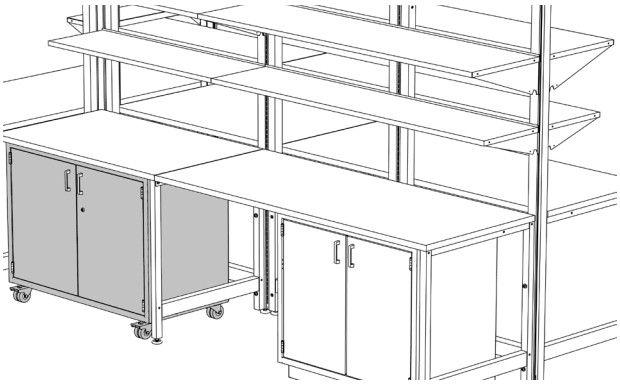

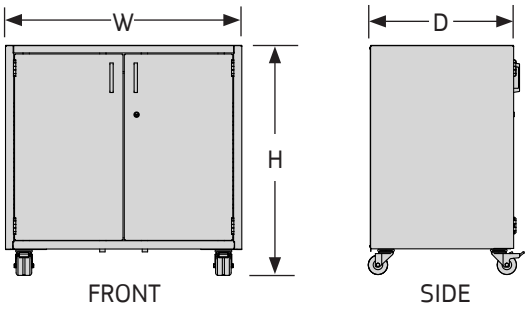

MOBILE BASE CABINETS, DOUBLE DOOR

- Built to SEFA standards, Cabinets are constructed of welded 18 and 20 gauge steel with a chemical resistant epoxy powder coat paint finish.
- Doors have 5-knuckle stainless steel institutional type hinges.
- Sound deadened doors have "double pan" construction with a bar pull.
- A removable bottom pan and a single full-depth adjustable shelf is included with each cabinet. Additional shelves available, consult factory.
- Available with or without locks. Locking cabinets with multiple doors/ drawers per unit will have the same key number per unit. Individual units will be keyed randomly and differently from the other. Contact factory for other keying options. Available key numbers are LL226 thru LL327.
- Mobile units have a solid steel top and back with two front total lock casters and two rear swivel casters.

NOTES

» Base cabinets can be used in conjunction with UltraFrame, Lab Legs and support brackets; see pages 2.2 - 2.3 and 10.25 - 10.27.

» Recessed pulls available; consult factory.

How to Specify

Step 1. Product Number

LUCB Base Cabinet

Step 2. Height

29 29" high **35** 35" high

Step 3. Width

30 30" wide **36** 36" wide **42** 42" wide **48** 48" wide

Step 4. Casters, Door, Pull Type

CODB Casters, Double Door, Bar Pull

Step 5. Locking/Non-Locking

N Non-Locking **L** Locking

Step 6. Paint Color Code

BK Black
GL Grey Light Smooth
NW Neutral White

Product Number	Description	Height		Width		Depth		Weight	
		in.	[mm]	in.	[mm]	in.	[mm]	lb.	[kg]
LUCB2930C0DBN	Sitting height, non-locking	29	737	30	762	21 7/8	556	111	50.3
LUCB2936C0DBN	Sitting height, non-locking	29	737	36	914	21 7/8	556	121	54.9
LUCB2942C0DBN	Sitting height, non-locking	29	737	42	1067	21 7/8	556	131	59.4
LUCB2948C0DBN	Sitting height, non-locking	29	737	48	1219	21 7/8	556	141	64.0
LUCB3530C0DBN	Standing height, non-locking	35	889	30	762	21 7/8	556	131	59.4
LUCB3536C0DBN	Standing height, non-locking	35	889	36	914	21 7/8	556	136	61.7
LUCB3542C0DBN	Standing height, non-locking	35	889	42	1067	21 7/8	556	156	70.8
LUCB3548C0DBN	Standing height, non-locking	35	889	48	1219	21 7/8	556	161	73.0
LUCB2930C0DBL	Sitting height, locking	29	737	30	762	21 7/8	556	111	50.3
LUCB2936C0DBL	Sitting height, locking	29	737	36	914	21 7/8	556	121	54.9
LUCB2942C0DBL	Sitting height, locking	29	737	42	1067	21 7/8	556	131	59.4
LUCB2948C0DBL	Sitting height, locking	29	737	48	1219	21 7/8	556	141	64.0
LUCB3530C0DBL	Standing height, locking	35	889	30	762	21 7/8	556	131	59.4
LUCB3536C0DBL	Standing height, locking	35	889	36	914	21 7/8	556	136	61.7
LUCB3542C0DBL	Standing height, locking	35	889	42	1067	21 7/8	556	156	70.8
LUCB3548C0DBL	Standing height, locking	35	889	48	1219	21 7/8	556	161	73.0

Rev 01/16/20

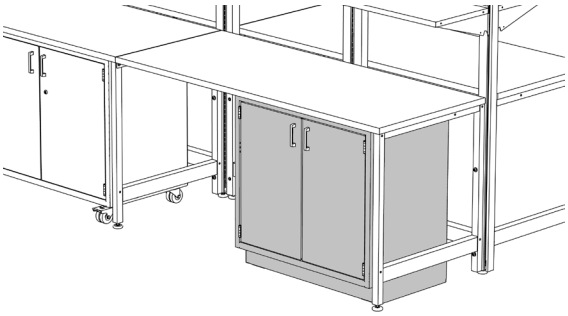

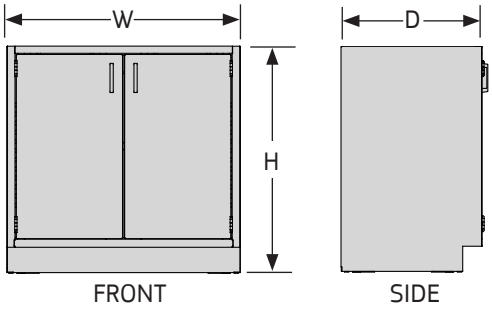

FIXED BASE CABINETS, DOUBLE DOOR

- Built to SEFA standards, Cabinets are constructed of welded 18 and 20 gauge steel with a chemical resistant epoxy powder coat paint finish.
- Doors have 5-knuckle stainless steel institutional type hinges.
- Sound deadened doors have "double pan" construction with a bar pull.
- A removable bottom pan and a single full-depth adjustable shelf is included with each cabinet. Additional shelves available, consult factory.
- Available with or without locks. Locking cabinets with multiple doors/ drawers per unit will have the same key number per unit. Individual units will be keyed randomly and differently from the other. Contact factory for other keying options. Available key numbers are LL226 thru LL327.
- Stationary units are open on top, with a removable back panel and include leveling glides.

NOTES

» Base cabinets can be used in conjunction with UltraFrame, Lab Legs and support brackets; see pages 2.2 - 2.3 and 10.25 - 10.27.

» Recessed pulls available; consult factory.

How to Specify

Step 1. Product Number

LUCB Base Cabinet

Step 2. Height

29 29" high **35** 35" high

Step 3. Width

30 30" wide **36** 36" wide **42** 42" wide
48 48" wide

Step 4. Glide

G0 Glide

Step 5. Door, Pull Type

DB Double Door, Bar

Step 6. Locking/Non-Locking

N Non-Locking **L** Locking

Step 7. Paint Color Code

BK Black
GL Grey Light Smooth
NW Neutral White

Product Number	Description	Height		Width		Depth		Weight	
		in.	[mm]	in.	[mm]	in.	[mm]	lb.	[kg]
LUCB2930G0DBN	Sitting height, non-locking	29	737	30	762	21 ⅞	556	105	47.6
LUCB2936G0DBN	Sitting height, non-locking	29	737	36	914	21 ⅞	556	115	52.2
LUCB2942G0DBN	Sitting height, non-locking	29	737	42	1067	21 ⅞	556	125	56.7
LUCB2948G0DBN	Sitting height, non-locking	29	737	48	1219	21 ⅞	556	135	61.2
LUCB3530G0DBN	Standing height, non-locking	35	889	30	762	21 ⅞	556	125	56.7
LUCB3536G0DBN	Standing height, non-locking	35	889	36	914	21 ⅞	556	130	59.0
LUCB3542G0DBN	Standing height, non-locking	35	889	42	1067	21 ⅞	556	150	68.0
LUCB3548G0DBN	Standing height, non-locking	35	889	48	1219	21 ⅞	556	155	70.3
LUCB2930G0DBL	Sitting height, locking	29	737	30	762	21 ⅞	556	105	47.6
LUCB2936G0DBL	Sitting height, locking	29	737	36	914	21 ⅞	556	115	52.2
LUCB2942G0DBL	Sitting height, locking	29	737	42	1067	21 ⅞	556	125	56.7
LUCB2948G0DBL	Sitting height, locking	29	737	48	1219	21 ⅞	556	135	61.2
LUCB3530G0DBL	Standing height, locking	35	889	30	762	21 ⅞	556	125	56.7
LUCB3536G0DBL	Standing height, locking	35	889	36	914	21 ⅞	556	130	59.0
LUCB3542G0DBL	Standing height, locking	35	889	42	1067	21 ⅞	556	150	68.0
LUCB3548G0DBL	Standing height, locking	35	889	48	1219	21 ⅞	556	155	70.3

Rev 01/16/20

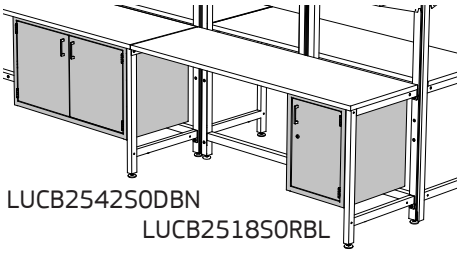

LUCB2542S0DBN
LUCB2518S0RBL

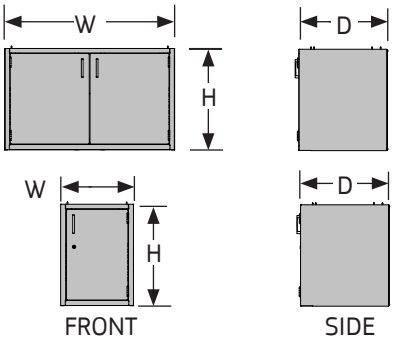

SUSPENDED BASE CABINETS, SINGLE & DBL. DOOR

- Suspended Base Cabinets can be hung from the underside of surfaces and 4-Legged Table Cabinet Mounting Brackets.
- Built to SEFA standards, cabinets are constructed of welded 18 and 20 gauge steel with a chemical resistant epoxy powder coat paint finish.
- Sound deadened doors and drawers have "double pan" construction with a bar pull.
- Drawers have full-extension ball bearing, plated drawer slides.
- Doors have 5-knuckle stainless steel institutional type hinges.
- A removable bottom pan and a single full-depth adjustable shelf is included with each cabinet. Additional shelves available, consult factory.
- Available with or without locks. Locking cabinets with multiple doors/ drawers per unit will have the same key number per unit. Individual units will be keyed randomly and differently from the other. Contact factory for other keying options. Available key numbers are LL226 thru LL327.
- Units are open on top and have a solid back panel.

NOTES

» Load capacity (includes cabinet and content) cannot exceed 500 lbs. Load capacity of the suspended cabinet does not supercede support component load rating.
» Suspended component(s) reduce the surface load capacity by an amount equal to the suspended component and its contents.
» Recessed pulls available; consult factory.
» 4-Legged Table Cabinet Mounting Brackets sold separately; see page 10.16.

How to Specify

Step 1. Product Number

LUCB Base Cabinet

Step 2. Height

25 25" high

Step 3. Width

18 18" wide **24** 24" wide **30** 30" wide
36 36" wide **42** 42" wide **48** 48" wide

Step 4. Suspended, Door

S0 Single Door **S0D** Double Door

Step 5. Hinge Location, Pull Type

LB Left, Bar **RB** Right, Bar **D** Double Door

Step 6. Locking/Non-Locking

N Non-Locking **L** Locking

Step 7. Paint Color Code

BK Black
GL Grey Light Smooth
NW Neutral White

Product Number	Description	Height		Width		Depth		Weight	
		in.	[mm]	in.	[mm]	in.	[mm]	lb.	[kg]
LUCB2518S0LBN	Suspended, left hinged, non-locking	25	635	18	457	21 7/8	556	86	39.0
LUCB2518S0RBN	Suspended, right hinged, non-locking	25	635	18	457	21 7/8	556	86	39.0
LUCB2524S0LBN	Suspended, left hinged, non-locking	25	635	24	610	21 7/8	556	101	45.8
LUCB2524S0RBN	Suspended, right hinged, non-locking	25	635	24	610	21 7/8	556	101	45.8
LUCB2518S0LBL	Suspended, left hinged, locking	25	635	18	457	21 7/8	556	86	39.0
LUCB2518S0RBL	Suspended, right hinged, locking	25	635	18	457	21 7/8	556	86	39.0
LUCB2524S0LBL	Suspended, left hinged, locking	25	635	24	610	21 7/8	556	101	45.8
LUCB2524S0RBL	Suspended, right hinged, locking	25	635	24	610	21 7/8	556	101	45.8
LUCB2530S0DBN	Suspended, double door, non-locking	25	635	30	762	21 7/8	556	111	50.3
LUCB2536S0DBN	Suspended, double door, non-locking	25	635	36	914	21 7/8	556	121	54.9
LUCB2542S0DBN	Suspended, double door, non-locking	25	635	42	1067	21 7/8	556	131	59.4
LUCB2548S0DBN	Suspended, double door, non-locking	25	635	48	1219	21 7/8	556	141	64.0
LUCB2530S0DBL	Suspended, double door, locking	25	635	30	762	21 7/8	556	131	59.4
LUCB2536S0DBL	Suspended, double door, locking	25	635	36	914	21 7/8	556	136	61.7
LUCB2542S0DBL	Suspended, double door, locking	25	635	42	1067	21 7/8	556	156	70.8
LUCB2548S0DBL	Suspended, double door, locking	25	635	48	1219	21 7/8	556	161	73.0

Rev 01/16/20

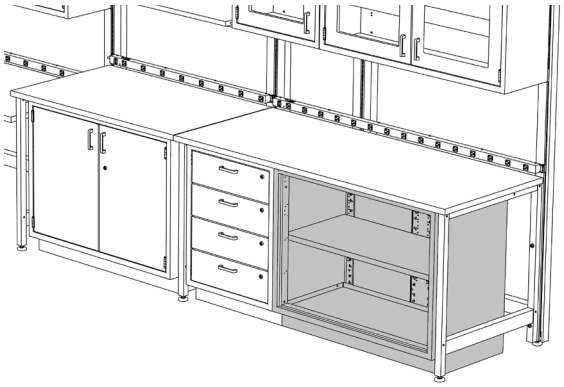

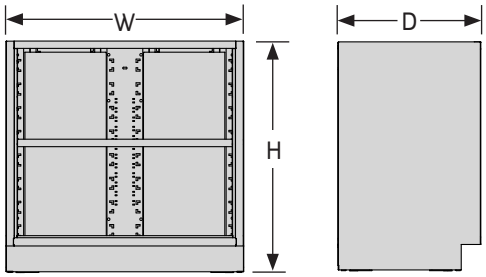

FIXED BASE CABINETS, OPEN UNIT

- Cabinets are constructed of welded 18 and 20 gauge steel with a chemical resistant epoxy powder coat paint finish.
- Built to SEFA standards.
- A removable bottom pan and a single full-depth adjustable shelf is included with each cabinet. Additional shelves available; consult factory.

NOTES

» Base cabinets can be used in conjunction with UltraFrame, Lab Legs and support brackets; see pages 2.2 - 2.3 and 10.25 - 10.27.

» Open unit is only available with glides.

How to Specify

Step 1. Product Number

LUCB Base Cabinet

Step 2. Height

29 29" high **35** 35" high

Step 3. Width

18 18" wide **24** 24" wide **30** 30" wide
36 36" wide **42** 42" wide **48** 48" wide

Step 4. Glide, Open Unit

G0 Glide

Step 5. Shelf

0000 Bottom Pan, Single Adjustable Shelf

Step 6. Paint Color Code

BK Black
GL Grey Light Smooth
NW Neutral White

Product Number	Description	Height		Width		Depth		Weight	
		in.	[mm]	in.	[mm]	in.	[mm]	lb.	[kg]
LUCB2918G0000	Sitting height, open, single shelf	29	737	18	457	21 7/8	556	65	29.5
LUCB2924G0000	Sitting height, open, single shelf	29	737	24	610	21 7/8	556	75	34.0
LUCB2930G0000	Sitting height, open, single shelf	29	737	30	762	21 7/8	556	90	40.8
LUCB2936G0000	Sitting height, open, single shelf	29	737	36	914	21 7/8	556	100	45.4
LUCB2942G0000	Sitting height, open, single shelf	29	737	42	1067	21 7/8	556	105	47.6
LUCB2948G0000	Sitting height, open, single shelf	29	737	48	1219	21 7/8	556	115	52.2
LUCB3518G0000	Standing height, open, single shelf	35	889	18	457	21 7/8	556	75	34.0
LUCB3524G0000	Standing height, open, single shelf	35	889	24	610	21 7/8	556	80	36.3
LUCB3530G0000	Standing height, open, single shelf	35	889	30	762	21 7/8	556	110	49.9
LUCB3536G0000	Standing height, open, single shelf	35	889	36	914	21 7/8	556	110	49.9
LUCB3542G0000	Standing height, open, single shelf	35	889	42	1067	21 7/8	556	115	52.2
LUCB3548G0000	Standing height, open, single shelf	35	889	48	1219	21 7/8	556	125	56.7

Rev 03/29/10

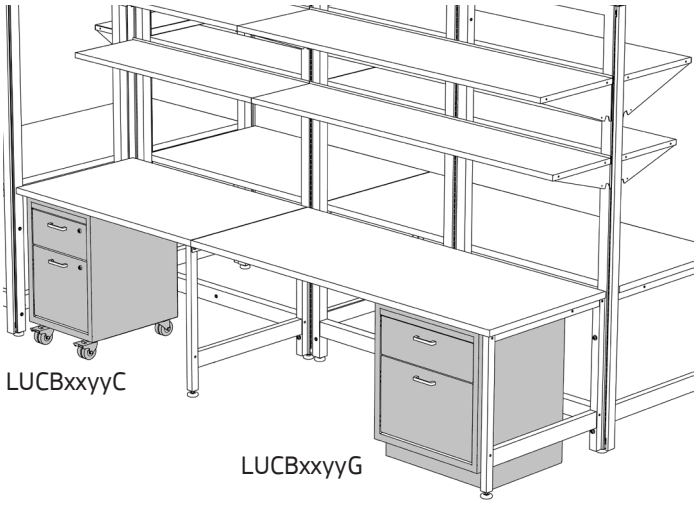

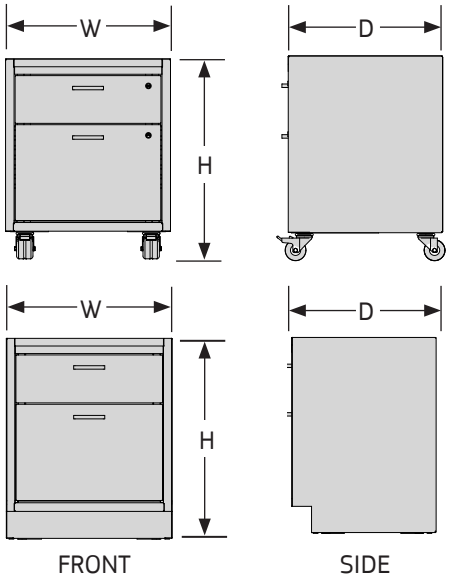

BASE CABINETS, SITTING HEIGHT, DOUBLE DRAWER

- Built to SEFA standards, Cabinets are constructed of welded 18 and 20 gauge steel with a chemical resistant epoxy powder coat paint finish.
- Drawers have full-extension ball bearing, plated drawer slides.
- Sound deadened drawers have "double pan" construction with a bar pull.
- Available with or without locks. Locking cabinets with multiple doors/drawers per unit will have the same key number per unit. Individual units will be keyed randomly and differently from the other. Contact factory for other keying options. Available key numbers are LL226 thru LL327.
- Mobile units have a solid steel top and back with two front total lock casters and two rear swivel casters.
- Stationary units are open on top, contain a removable back panel and include leveling glides.

NOTES

» Base cabinets can be used in conjunction with UltraFrame, Lab Legs and support brackets; see pages 2.2 - 2.3 and 10.25 - 10.27.
» Double drawer unit is only available in sitting height (29" high).
» Recessed pulls available; consult factory.

How to Specify

Step 1. Product Number
LUCB Base Cabinet

Step 2. Height
29 29" high

Step 3. Width
18 18" wide **24** 24" wide

Step 4. Glide or Casters
G Glide **C** Casters

Step 5. Drawer, Pull Type
20B Double Drawer, Bar

Step 6. Locking/Non-Locking
N Non-Locking **L** Locking

Step 7. Paint Color Code
BK Black
GL Grey Light Smooth
NW Neutral White

Product Number	Description	Height		Width		Depth		Weight	
		in.	[mm]	in.	[mm]	in.	[mm]	lb.	[kg]
LUCB2918G20BN	Sitting height, glides, non-locking	29	737	18	457	21 ⅞	556	95	43.1
LUCB2924G20BN	Sitting height, glides, non-locking	29	737	24	610	21 ⅞	556	105	47.6
LUCB2918G20BL	Sitting height, glides, locking	29	737	18	457	21 ⅞	556	95	43.1
LUCB2924G20BL	Sitting height, glides, locking	29	737	24	610	21 ⅞	556	105	47.6
LUCB2918C20BN	Sitting height, casters, non-locking	29	737	18	457	21 ⅞	556	101	45.8
LUCB2924C20BN	Sitting height, casters, non-locking	29	737	24	610	21 ⅞	556	111	50.3
LUCB2918C20BL	Sitting height, casters, locking	29	737	18	457	21 ⅞	556	101	45.8
LUCB2924C20BL	Sitting height, casters, locking	29	737	24	610	21 ⅞	556	111	50.3

Rev 01/16/20

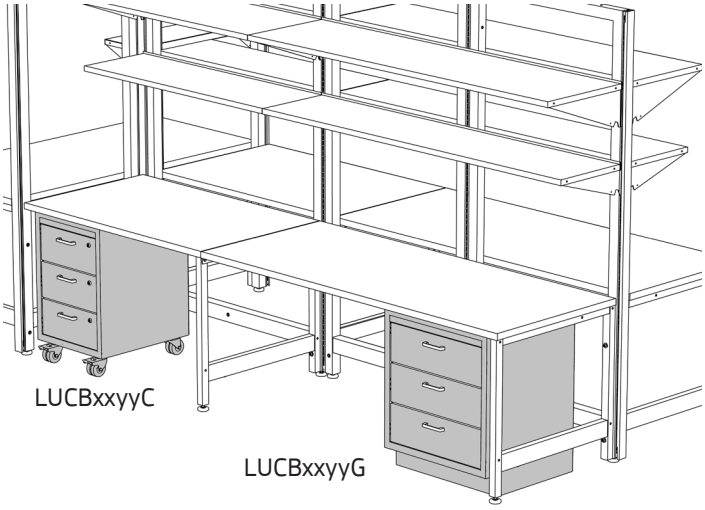

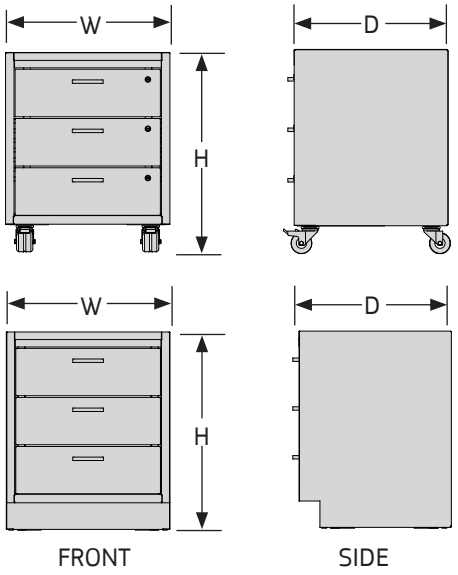

BASE CABINETS, SITTING HEIGHT, 3-DRAWER

- Built to SEFA standards, Cabinets are constructed of welded 18 and 20 gauge steel with a chemical resistant epoxy powder coat paint finish.
- Drawers have full-extension ball bearing, plated drawer slides.
- Sound deadened drawers have "double pan" construction with a bar pull.
- Available with or without locks. Locking cabinets with multiple doors/drawers per unit will have the same key number per unit. Individual units will be keyed randomly and differently from the other. Contact factory for other keying options. Available key numbers are LL226 thru LL327.
- Mobile units have a solid steel top and back with two front total lock casters and two rear swivel casters.
- Stationary units are open on top, contain a removable back panel and include leveling glides.

NOTES

» Base cabinets can be used in conjunction with UltraFrame, Lab Legs and support brackets; see pages 2.2 - 2.3 and 10.25 - 10.27.

» Recessed pulls available; consult factory.

How to Specify

Step 1. Product Number

LUCB Base Cabinet

Step 2. Height

29 29" high

Step 3. Width

18 18" wide **24** 24" wide

Step 4. Glide or Casters

G Glide **C** Casters

Step 5. Drawer, Pull Type

30B 3-Drawer, Bar

Step 6. Locking/Non-Locking

N Non-Locking **L** Locking

Step 7. Paint Color Code

BK Black
GL Grey Light Smooth
NW Neutral White

Product Number	Description	Height		Width		Depth		Weight	
		in.	[mm]	in.	[mm]	in.	[mm]	lb.	[kg]
LUCB2918G30BN	Sitting height, glides, non-locking	29	737	18	457	21 7/8	556	95	43.1
LUCB2924G30BN	Sitting height, glides, non-locking	29	737	24	610	21 7/8	556	110	49.9
LUCB2918G30BL	Sitting height, glides, locking	29	737	18	457	21 7/8	556	95	43.1
LUCB2924G30BL	Sitting height, glides, locking	29	737	24	610	21 7/8	556	110	49.9
LUCB2918C30BN	Sitting height, casters, non-locking	29	737	18	457	21 7/8	556	101	45.8
LUCB2924C30BN	Sitting height, casters, non-locking	29	737	24	610	21 7/8	556	116	52.6
LUCB2918C30BL	Sitting height, casters, locking	29	737	18	457	21 7/8	556	101	45.8
LUCB2924C30BL	Sitting height, casters, locking	29	737	24	610	21 7/8	556	116	52.6

Rev 01/16/20

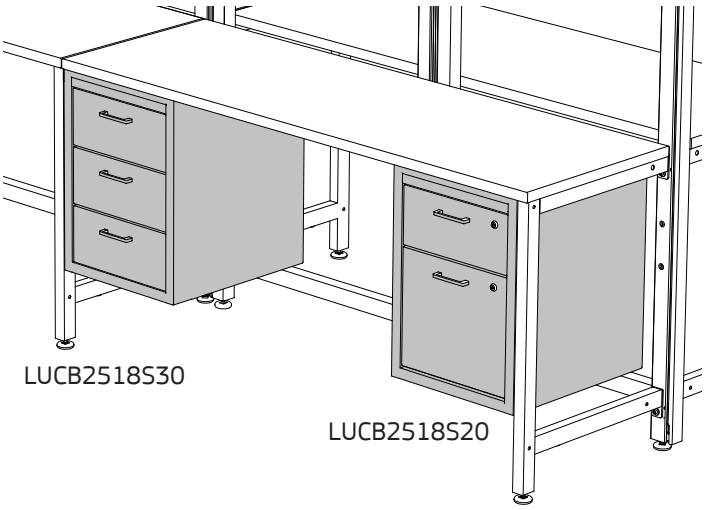

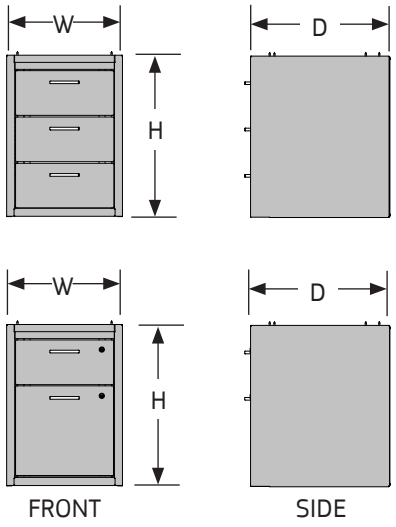

SUSPENDED BASE CABINETS, DRAWERS

- Suspended Base Cabinets can be hung from the underside of surfaces and 4-Legged Table Cabinet Mounting Brackets.
- Built to SEFA standards, Cabinets are constructed of welded 18 and 20 gauge steel with a chemical resistant epoxy powder coat paint finish.
- Drawers have full-extension ball bearing, plated drawer slides.
- Sound deadened drawers have "double pan" construction with a bar pull.
- Available with or without locks. Locking cabinets with multiple doors/drawers per unit will have the same key number per unit. Individual units will be keyed randomly and differently from the other. Contact factory for other keying options. Available key numbers are LL226 thru LL327.
- Units are open on top and have a solid steel back panel.

NOTES

» Load capacity (includes cabinet and content) cannot exceed 500 lbs. Load capacity of the suspended cabinet does not supercede support component load rating.

» The suspended component(s) reduces the surface load capacity by an amount equal to the suspended component and its contents.

» Recessed pulls available; consult factory.

» 4-Legged Table Cabinet Mounting Brackets sold separately; see page 10.16.

How to Specify

Step 1. Product Number

LUCB Base Cabinet

Step 2. Height

25 25" high

Step 3. Width

18 18" wide **24** 24" wide

Step 4. Suspended

S Suspended

Step 5. Drawer, Pull Type

30B 3-Drawer, Bar

Step 6. Locking/Non-Locking

N Non-Locking **L** Locking

Step 7. Paint Color Code

BK Black
GL Grey Light Smooth
NW Neutral White

Product Number	Description	Height		Width		Depth		Weight	
		in.	[mm]	in.	[mm]	in.	[mm]	lb.	[kg]
LUCB2518S30BN	Suspended, 3-drawer, non-locking	25	635	18	457	21 7/8	556	81	36.7
LUCB2524S30BN	Suspended, 3-drawer, non-locking	25	635	24	610	21 7/8	556	91	41.3
LUCB2518S30BL	Suspended, 3-drawer, locking	25	635	18	457	21 7/8	556	81	36.7
LUCB2524S30BL	Suspended, 3-drawer, locking	25	635	24	610	21 7/8	556	91	41.3
LUCB2518S20BN	Suspended, 2-drawer, non-locking	25	635	18	457	21 7/8	556	81	36.7
LUCB2524S20BN	Suspended, 2-drawer, non-locking	25	635	24	610	21 7/8	556	91	41.3
LUCB2518S20BL	Suspended, 2-drawer, locking	25	635	18	457	21 7/8	556	81	36.7
LUCB2524S20BL	Suspended, 2-drawer, locking	25	635	24	610	21 7/8	556	91	41.3

Rev 01/16/20

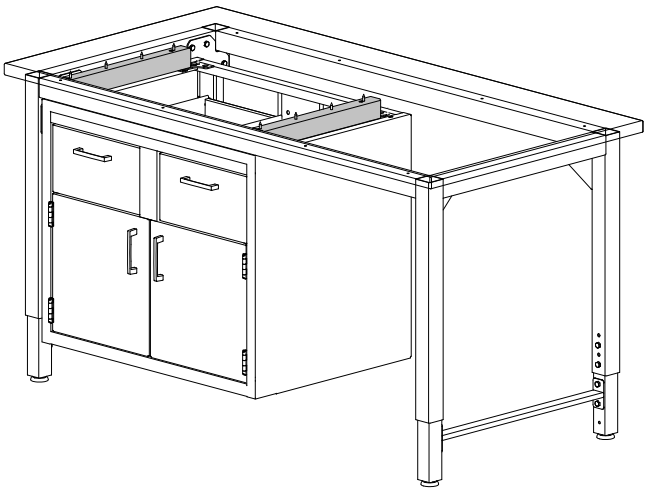

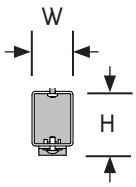

FRONT



SIDE

4-LEGGED TABLE CABINET MOUNTING BRACKETS

- 4-Legged Table Cabinet Mounting Brackets allow suspended Base Cabinets to be mounted to a work surface on the 4-Legged Table.
- 4-Legged Table, Work Surface, Cabinet and Mounting Brackets must be ordered individually.
- Mounting Brackets are used with 25" high Base Cabinets which vary in width from 18-48 inches.
- Color is Standard White.

NOTES

» Load capacity (includes cabinet and content) cannot exceed 500 lbs. Load capacity of the suspended cabinet does not supercede support component load rating.

» The suspended component(s) reduces the surface load capacity by an amount equal to the suspended component and its contents.

» Recessed pulls available; consult factory.

How to Specify

Step 1. Product Number

LUCB Base Cabinet

Step 2. Mounting Bracket

4MB 4-Legged Table

Step 3. Paint Color Code

SW Standard White

Product Number	Description	Height		Width		Depth		Weight	
		in.	[mm]	in.	[mm]	in.	[mm]	lb.	[kg]
LUCB4MBSW	Mounting bracket, pair	2 ⅜	60	2	51	16 ½	419	5	2.3

Rev 07/21/15

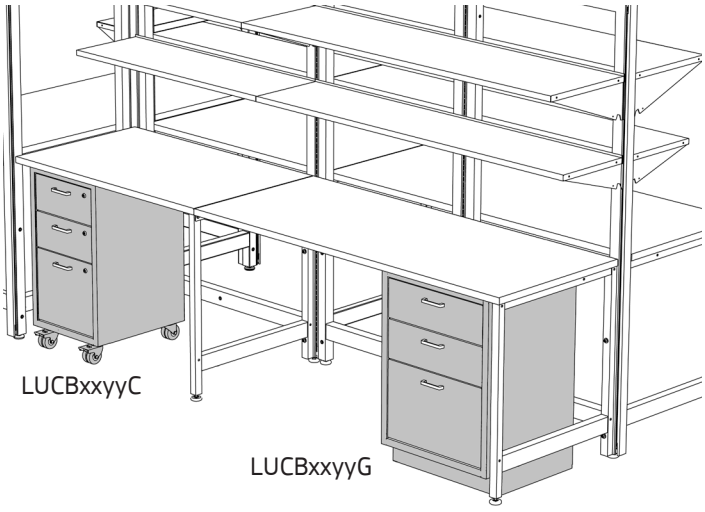

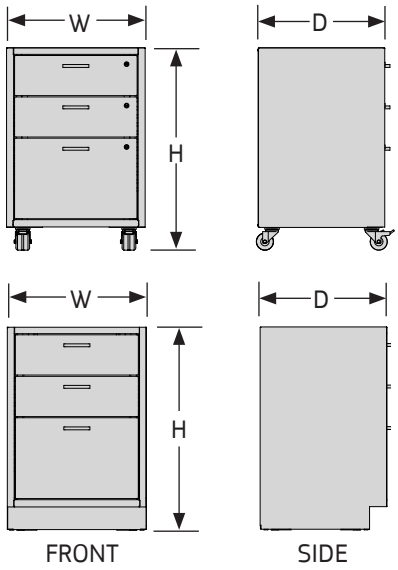

BASE CABINETS, STANDING HEIGHT 3-DRAWER

- Built to SEFA standards, Cabinets are constructed of welded 18 and 20 gauge steel with a chemical resistant epoxy powder coat paint finish.
- Drawers have full-extension ball bearing, plated drawer slides.
- Sound deadened drawers have "double pan" construction with a bar pull.
- Available with or without locks. Locking cabinets with multiple doors/drawers per unit will have the same key number per unit. Individual units will be keyed randomly and differently from the other. Contact factory for other keying options. Available key numbers are LL226 thru LL327.
- Mobile units have a solid steel top and back with two front total lock casters and two rear swivel casters.
- Stationary units are open on top, contain a removable back panel and include leveling glides.

NOTES

» Base cabinets can be used in conjunction with UltraFrame, Lab Legs and support brackets; see pages 2.2 - 2.3 and 10.25 - 10.27.

» Recessed pulls available; consult factory.

How to Specify

Step 1. Product Number

LUCB Base Cabinet

Step 2. Height

35 35" high

Step 3. Width

18 18" wide **24** 24" wide

Step 4. Glide or Casters

G Glide **C** Casters

Step 5. Drawer, Pull Type

30B 3-Drawer, Bar

Step 6. Locking/Non-Locking

N Non-Locking **L** Locking

Step 7. Paint Color Code

BK Black
GL Grey Light Smooth
NW Neutral White

Product Number	Description	Height		Width		Depth		Weight	
		in.	[mm]	in.	[mm]	in.	[mm]	lb.	[kg]
LUCB3518G30BN	Standing height, glides, non-locking	35	889	18	457	21 ⅞	556	110	49.9
LUCB3524G30BN	Standing height, glides, non-locking	35	889	24	610	21 ⅞	556	125	56.7
LUCB3518G30BL	Standing height, glides, locking	35	889	18	457	21 ⅞	556	110	49.9
LUCB3524G30BL	Standing height, glides, locking	35	889	24	610	21 ⅞	556	125	56.7
LUCB3518C30BN	Standing height, casters, non-locking	35	889	18	457	21 ⅞	556	116	52.6
LUCB3524C30BN	Standing height, casters, non-locking	35	889	24	610	21 ⅞	556	101	45.8
LUCB3518C30BL	Standing height, casters, locking	35	889	18	457	21 ⅞	556	116	52.6
LUCB3524C30BL	Standing height, casters, locking	35	889	24	610	21 ⅞	556	101	45.8

Rev 01/16/20

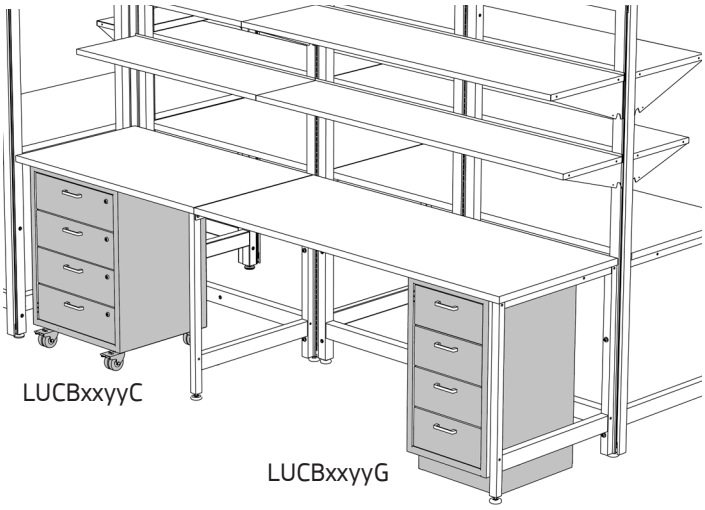

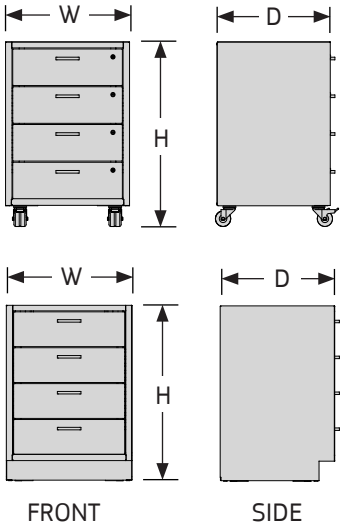

BASE CABINETS, STANDING HEIGHT 4-DRAWER

- Built to SEFA standards, Cabinets are constructed of welded 18 and 20 gauge steel with a chemical resistant epoxy powder coat paint finish.
- Drawers have full-extension ball bearing, plated drawer slides.
- Sound deadened drawers have "double pan" construction with a bar pull.
- Available with or without locks. Locking cabinets with multiple doors/drawers per unit will have the same key number per unit. Individual units will be keyed randomly and differently from the other. Contact factory for other keying options. Available key numbers are LL226 thru LL327.
- Mobile units have a solid steel top and back with two front total lock casters and two rear swivel casters.
- Stationary units are open on top, contain a removable back panel and include leveling glides.

NOTES

» Base cabinets can be used in conjunction with UltraFrame, Lab Legs and support brackets; see pages 2.2 - 2.3 and 10.25 - 10.27.

» Recessed pulls available; consult factory.

How to Specify

Step 1. Product Number

LUCB Base Cabinet

Step 2. Height

35 35" high

Step 3. Width

18 18" wide **24** 24" wide

Step 4. Glide or Casters

G Glide **C** Casters

Step 5. Drawer, Pull Type

40B 4-Drawer, Bar

Step 6. Locking/Non-Locking

N Non-Locking **L** Locking

Step 7. Paint Color Code

BK Black
GL Grey Light Smooth
NW Neutral White

Product Number	Description	Height		Width		Depth		Weight	
		in.	[mm]	in.	[mm]	in.	[mm]	lb.	[kg]
LUCB3518G40BN	Standing height, glides, non-locking	35	889	18	457	21 7/8	556	115	52.2
LUCB3524G40BN	Standing height, glides, non-locking	35	889	24	610	21 7/8	556	130	59.0
LUCB3518G40BL	Standing height, glides, locking	35	889	18	457	21 7/8	556	115	52.2
LUCB3524G40BL	Standing height, glides, locking	35	889	24	610	21 7/8	556	130	59.0
LUCB3518C40BN	Standing height, casters, non-locking	35	889	18	457	21 7/8	556	121	54.9
LUCB3524C40BN	Standing height, casters, non-locking	35	889	24	610	21 7/8	556	136	61.7
LUCB3518C40BL	Standing height, casters, locking	35	889	18	457	21 7/8	556	121	54.9
LUCB3524C40BL	Standing height, casters, locking	35	889	24	610	21 7/8	556	136	61.7

Rev 01/16/20

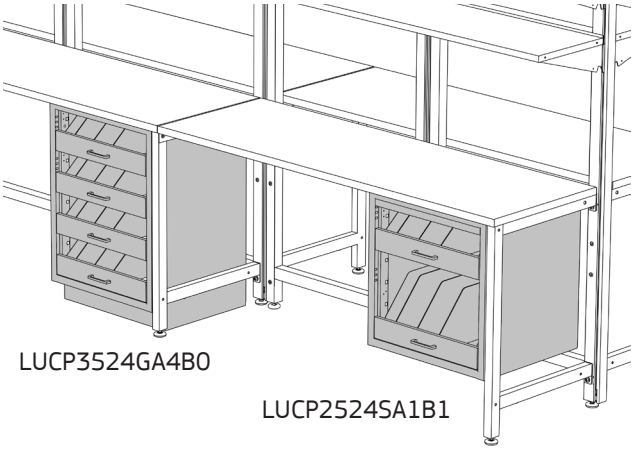

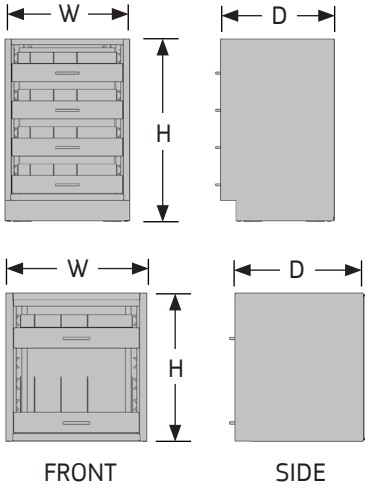

BOTTLE DRAWER CABINETS

- Built to SEFA standards, Cabinets are constructed of welded 18 and 20 gauge steel with a chemical resistant epoxy powder coat paint finish.
- Drawers have full-extension ball bearing, plated drawer slides.
- Suspended bottle drawers can be hung from the underside of surfaces and 4-Legged Tables.
- A-size drawers are 5¼" H and B-size drawers are 9⅛" H.
- Drawer wrappers, binning strips and 3 drawer dividers provided with each drawer.

NOTES

» Load capacity is 50 lbs. per drawer.
» The suspended component(s) reduces the surface load capacity by an amount equal to the suspended component and its contents.
» Recessed pulls available; consult factory.

How to Specify

Step 1. Product Number

LUCP Bottle Drawer Cabinet

Step 2. Height

25 25" high **29** 29" high **35** 35" high

Step 3. Width

24 24" wide

Step 4. Suspended or Glide

S Suspended **G** Glide

Step 5. Drawer Size and Quantity

A0 (0) A-size
A1 (1) A-size
A3 (3) A-size
A4 (4) A-size
B0 (0) B-size
B1 (1) B-size
B2 (2) B-size

Step 6. Paint Color Code

BK Black
GL Grey Light Smooth
NW Neutral White

Product Number	Description	Height		Width		Depth		Weight	
		in.	[mm]	in.	[mm]	in.	[mm]	lb.	[kg]
LUCP2524SA0B2	Bottle drawer, suspended	25	635	24	610	21 ⅞	556	107	48.5
LUCP2524SA1B1	Bottle drawer, suspended	25	635	24	610	21 ⅞	556	105	47.6
LUCP2524SA3B0	Bottle drawer, suspended	25	635	24	610	21 ⅞	556	117	53.1
LUCP2924GA0B2	Bottle drawer, glides	29	737	24	610	21 ⅞	556	110	49.9
LUCP2924GA1B1	Bottle drawer, glides	29	737	24	610	21 ⅞	556	108	49.0
LUCP2924GA3B0	Bottle drawer, glides	29	737	24	610	21 ⅞	556	120	54.4
LUCP3524GA0B2	Bottle drawer, glides	35	889	24	610	21 ⅞	556	115	52.2
LUCP3524GA1B2	Bottle drawer, glides	35	889	24	610	21 ⅞	556	130	59.0
LUCP3524GA2B1	Bottle drawer, glides	35	889	24	610	21 ⅞	556	128	58.1
LUCP3524GA4B0	Bottle drawer, glides	35	889	24	610	21 ⅞	556	140	63.5

Rev 09/22/15

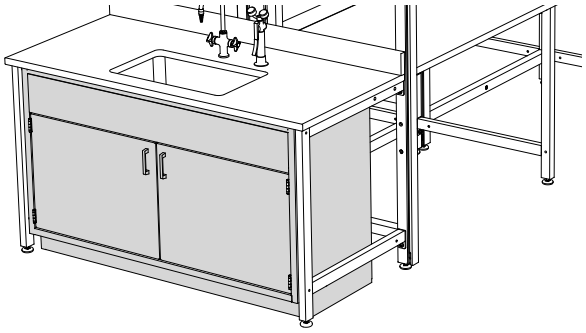

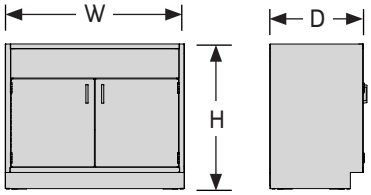

SINK BASE CABINET, STANDARD

- Built to SEFA standards, Cabinets are constructed of welded 18 and 20 gauge steel with a chemical resistant epoxy powder coat paint finish.
- Sound deadened doors have "double pan" construction with a bar pull.
- Doors have 5-knuckle stainless steel institutional type hinges.
- Features a removable bottom pan as well as open upper back for access to plumbing.
- Available with or without locks. Locking cabinets with multiple doors/ drawers per unit will have the same key number per unit. Individual units will be keyed randomly and differently from the other. Contact factory for other keying options. Available key numbers are LL226 thru LL327.

NOTES

» Sink Bases can be used in conjunction with UltraFrame, Lab Legs and support brackets; see pages 2.2 - 2.3 and 10.25 - 10.27.

» Recessed pulls available; consult factory.

How to Specify

Step 1. Product Number

LUCS Sink Base Cabinet

Step 2. Height

35 35" high

Step 3. Width

18 18" wide **24** 24" wide **30** 30" wide
36 36" wide **42** 42" wide **48** 48" wide
52 52" wide **58** 58" wide

Step 4. Door, Hinge Location, Pull Type

LB Single, Left, Bar **RB** Single, Right, Bar
DB Double, Bar

Step 5. Locking/Non-Locking

N Non-Locking **L** Locking

Step 6. Paint Color Code

BK Black
GL Grey Light Smooth
NW Neutral White

Product Number	Description	Height		Width		Depth		Weight	
		in.	[mm]	in.	[mm]	in.	[mm]	lb.	[kg]
LUCS3518LBN	Left hinged, single door, non-locking	35	889	18	457	21 7/8	556	75	34.0
LUCS3518RBN	Right hinged, single door, non-locking	35	889	18	457	21 7/8	556	75	34.0
LUCS3524LBN	Left hinged, single door, non-locking	35	889	24	610	21 7/8	556	85	38.6
LUCS3524RBN	Right hinged, single door, non-locking	35	889	24	610	21 7/8	556	85	38.6
LUCS3530DBN	Double door, non-locking	35	889	30	762	21 7/8	556	105	47.6
LUCS3536DBN	Double door, non-locking	35	889	36	914	21 7/8	556	105	47.6
LUCS3542DBN	Double door, non-locking	35	889	42	1067	21 7/8	556	120	54.4
LUCS3548DBN	Double door, non-locking	35	889	48	1219	21 7/8	556	125	56.7
LUCS3552DBN	Double door, non-locking	35	889	52	1321	21 7/8	556	135	61.2
LUCS3558DBN	Double door, non-locking	35	889	58	1473	21 7/8	556	140	63.5
LUCS3518LBL	Left hinged, single door, locking	35	889	18	457	21 7/8	556	75	34.0
LUCS3518RBL	Right hinged, single door, locking	35	889	18	457	21 7/8	556	75	34.0
LUCS3524LBL	Left hinged, single door, locking	35	889	24	610	21 7/8	556	85	38.6
LUCS3524RBL	Right hinged, single door, locking	35	889	24	610	21 7/8	556	85	38.6
LUCS3530DBL	Double door, locking	35	889	30	762	21 7/8	556	105	47.6
LUCS3536DBL	Double door, locking	35	889	36	914	21 7/8	556	105	47.6
LUCS3542DBL	Double door, locking	35	889	42	1067	21 7/8	556	120	54.4
LUCS3548DBL	Double door, locking	35	889	48	1219	21 7/8	556	125	56.7
LUCS3552DBL	Double door, locking	35	889	52	1321	21 7/8	556	135	61.2
LUCS3558DBL	Double door, locking	35	889	58	1473	21 7/8	556	140	63.5

Rev 01/16/20

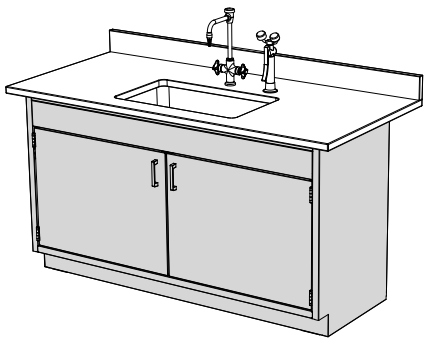

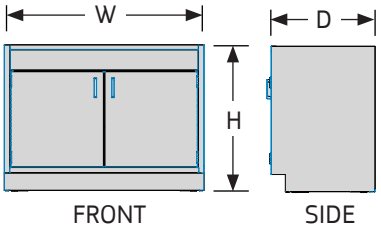

SINK BASE CABINET, ADA, STANDARD

- Built to SEFA standards, Cabinets meet ADA height requirements and are constructed of welded 18 and 20 gauge steel with a chemical resistant epoxy powder coat paint finish.
- Sound deadened doors have "double pan" construction with a bar pull.
- Doors have 5-knuckle stainless steel institutional type hinges.
- Features a removable bottom pan as well as open upper back for access to plumbing.
- Available with or without locks. Locking cabinets with multiple doors/drawers per unit will have the same key number per unit. Individual units will be keyed randomly and differently from the other. Contact factory for other keying options. Available key numbers are LL226 thru LL327.

NOTES

» Sink Bases can be used in conjunction with UltraFrame, Lab Legs and support brackets; see pages 2.2 - 2.3 and 10.27 - 10.29.

» Recessed pulls available; consult factory.

How to Specify

Step 1. Product Number

LUCS Sink Base Cabinet, ADA, Standard

Step 2. Height

35 35" high

Step 3. Width

18 18" wide **24** 24" wide **30** 30" wide
36 36" wide **42** 42" wide **48** 48" wide
52 52" wide **58** 58" wide

Step 4. Door, Hinge Location, Pull Type

LB Single, Left, Bar **RB** Single, Right, Bar
DB Double, Bar

Step 5. Locking/Non-Locking

N Non-Locking **L** Locking

Step 6. Paint Color Code

BK Black
GL Grey Light Smooth
NW Neutral White

Product Number	Description	Height		Width		Depth		Weight	
		in.	[mm]	in.	[mm]	in.	[mm]	lb.	[kg]
LUCS3318LBN	Left hinged, single door, non-locking	33	838	18	457	21 7/8	556	75	34
LUCS3318RBN	Right hinged, single door, non-locking	33	838	18	457	21 7/8	556	75	34
LUCS3324LBN	Left hinged, single door, non-locking	33	838	24	610	21 7/8	556	85	39
LUCS3324RBN	Right hinged, single door, non-locking	33	838	24	610	21 7/8	556	85	39
LUCS3330DBN	Double door, non-locking	33	838	30	762	21 7/8	556	105	48
LUCS3336DBN	Double door, non-locking	33	838	36	914	21 7/8	556	110	50
LUCS3342DBN	Double door, non-locking	33	838	42	1067	21 7/8	556	120	54
LUCS3348DBN	Double door, non-locking	33	838	48	1219	21 7/8	556	125	57
LUCS3352DBN	Double door, non-locking	33	838	52	1321	21 7/8	556	140	64
LUCS3358DBN	Double door, non-locking	33	838	58	1473	21 7/8	556	175	79
LUCS3318LBL	Left hinged, single door, locking	33	838	18	457	21 7/8	556	75	34
LUCS3318RBL	Right hinged, single door, locking	33	838	18	457	21 7/8	556	75	34
LUCS3324LBL	Left hinged, single door, locking	33	838	24	610	21 7/8	556	85	39
LUCS3324RBL	Right hinged, single door, locking	33	838	24	610	21 7/8	556	85	39
LUCS3330DBL	Double door, locking	33	838	30	762	21 7/8	556	105	48
LUCS3336DBL	Double door, locking	33	838	36	914	21 7/8	556	110	50
LUCS3342DBL	Double door, locking	33	838	42	1067	21 7/8	556	120	54
LUCS3348DBL	Double door, locking	33	838	48	1219	21 7/8	556	125	57
LUCS3352DBL	Double door, locking	33	838	52	1321	21 7/8	556	140	64
LUCS3358DBL	Double door, locking	33	838	58	1473	21 7/8	556	175	79

Rev 03/12/20

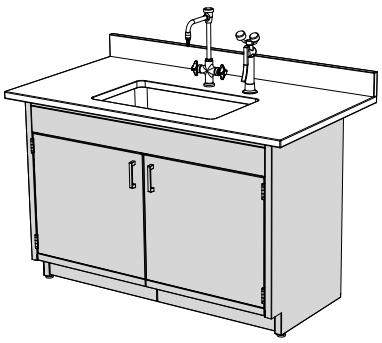

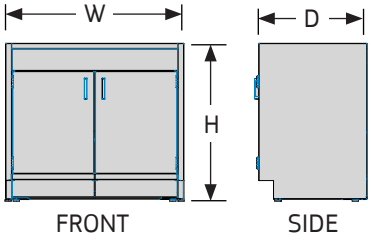

SINK BASE CABINET, ADA, DOOR TO FLOOR

- Built to SEFA standards, Cabinets meet ADA height requirements and are constructed of welded 18 and 20 gauge steel with a chemical resistant epoxy powder coat paint finish.
- Sound deadened doors have "double pan" construction with a bar pull.
- Doors have 5-knuckle stainless steel institutional type hinges.
- Door to floor ADA Sink Base Cabinet door opening includes a integrated toe kick (opens with door).

NOTES

» Sink Bases can be used in conjunction with UltraFrame, Lab Legs and support brackets; see pages 2.2 - 2.3 and 10.27 - 10.29.

» Recessed pulls available; consult factory.

How to Specify

Step 1. Product Number

LUCA Sink Base Cabinet, ADA, Door to Floor

Step 2. Height

33 33" high

Step 3. Width

30 30" wide **36** 36" wide **42** 42" wide
48 48" wide

Step 4. Door, Hinge Location, Pull Type

LB Single, Left, Bar **RB** Single, Right, Bar
DB Double, Bar

Step 5. Locking/Non-Locking

N Non-Locking

Step 6. Paint Color Code

BK Black
GL Grey Light Smooth
NW Neutral White

Product Number	Description	Height		Width		Depth		Weight	
		in.	[mm]	in.	[mm]	in.	[mm]	lb.	[kg]
LUCA3330DBN	Double door, non-locking	33	838	30	762	21 7/8	556	105	48
LUCA3336DBN	Double door, non-locking	33	838	36	914	21 7/8	556	110	50
LUCA3342DBN	Double door, non-locking	33	838	42	1067	21 7/8	556	120	54
LUCA3348DBN	Double door, non-locking	33	838	48	1219	21 7/8	556	125	57

Rev 03/12/20

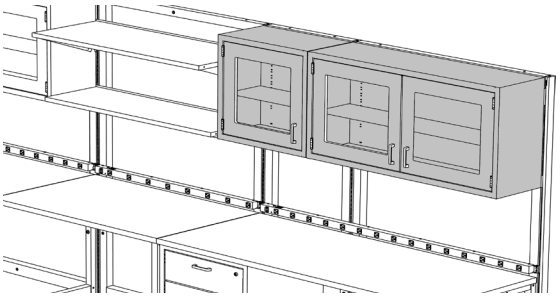

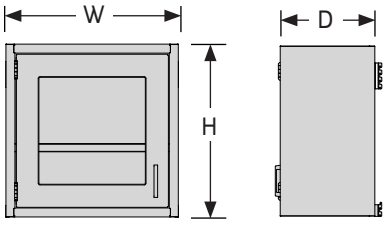

WALL CASES, GLASS DOORS

- Built to SEFA standards, Cabinets are constructed of welded 18 and 20 gauge steel with a chemical resistant epoxy powder coat paint finish.
- Single or double glass doors are available with or without locks.
- A single full depth adjustable shelf is included with each 24" high cabinet and two shelves are included with each 30" high cabinet.
- Sound deadened doors have "double pan" construction with a bar pull.
- Doors have 5-knuckle stainless steel institutional type hinges.
- All standard wall cases are 13" deep.
- Wall cases include the necessary hardware for mounting to either UltraFrames, Wall Strips or directly to a wall.
- Available with or without locks. Locking cabinets with multiple doors/ drawers per unit will have the same key number per unit. Individual units will be keyed randomly and differently from the other. Contact factory for other keying options. Available key numbers are LL226 thru LL327.

NOTES

» Additional shelves, 16" cabinet depth and recessed pulls available; consult factory.

How to Specify

Step 1. Product Number

LUCW Wall Cabinet

Step 2. Height

24 24" high **30** 30" high

Step 3. Width

24 24" wide **30** 30" wide **36** 36" wide
48 48" wide

Step 4. Glass Door, Hinge Location, Pull Type

GLB Single, Left, Bar **GRB** Single, Right, Bar
GDB Double, Bar

Step 5. Locking/Non-Locking

N Non-Locking **L** Locking

Step 6. Paint Color Code

BK Black **GL** Grey Light Smooth
NW Neutral White

Product Number	Description	Height		Width		Depth		Weight	
		in.	[mm]	in.	[mm]	in.	[mm]	lb.	[kg]
LUCW2424GLBN	Left hinged, single door, non-locking	24	610	24	610	13	330	55	24.9
LUCW2424GRBN	Right hinged, single door, non-locking	24	610	24	610	13	330	55	24.9
LUCW2430GDBN	Double door, non-locking	24	610	30	762	13	330	70	31.8
LUCW2436GDBN	Double door, non-locking	24	610	36	914	13	330	80	36.3
LUCW2448GDBN	Double door, non-locking	24	610	48	1219	13	330	100	45.4
LUCW3024GLBN	Left hinged, single door, non-locking	31	787	24	610	13	330	70	31.8
LUCW3024GRBN	Right hinged, single door, non-locking	31	787	24	610	13	330	70	31.8
LUCW3030GDBN	Double door, non-locking	31	787	30	762	13	330	85	38.6
LUCW3036GDBN	Double door, non-locking	31	787	36	914	13	330	95	43.1
LUCW3048GDBN	Double door, non-locking	31	787	48	1219	13	330	125	56.7
LUCW2424GLBL	Left hinged, single door, locking	24	610	24	610	13	330	55	24.9
LUCW2424GRBL	Right hinged, single door, locking	24	610	24	610	13	330	55	24.9
LUCW2430GDBL	Double door, locking	24	610	30	762	13	330	70	31.8
LUCW2436GDBL	Double door, locking	24	610	36	914	13	330	80	36.3
LUCW2448GDBL	Double door, locking	24	610	48	1219	13	330	100	45.4
LUCW3024GLBL	Left hinged, single door, locking	31	787	24	610	13	330	70	31.8
LUCW3024GRBL	Right hinged, single door, locking	31	787	24	610	13	330	70	31.8
LUCW3030GDBL	Double door, locking	31	787	30	762	13	330	85	38.6
LUCW3036GDBL	Double door, locking	31	787	36	914	13	330	95	43.1
LUCW3048GDBL	Double door, locking	31	787	48	1219	13	330	125	56.7

Rev 01/16/20

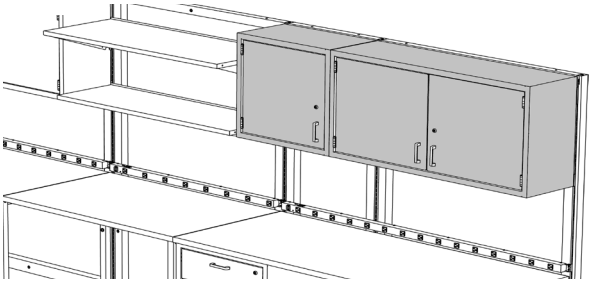

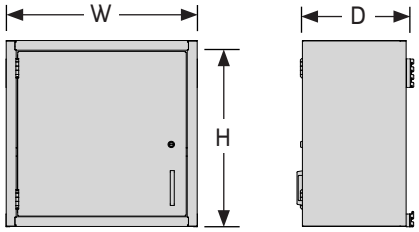

WALL CASES, SOLID DOORS

- Built to SEFA standards, Cabinets are constructed of welded 18 and 20 gauge steel with a chemical resistant epoxy powder coat paint finish.
- Single or double glass doors are available with or without locks.
- A single full depth adjustable shelf is included with each 24" high cabinet and two shelves are included with each 30" high cabinet.
- Sound deadened doors have "double pan" construction with a bar pull.
- Doors have 5-knuckle stainless steel institutional type hinges.
- All standard wall cases are 13" deep.
- Wall cases include the necessary hardware for mounting to either UltraFrames, Wall Strips or directly to a wall.
- Available with or without locks. Locking cabinets with multiple doors/drawers per unit will have the same key number per unit. Individual units will be keyed randomly and differently from the other. Contact factory for other keying options. Available key numbers are LL226 thru LL327.

NOTES

» Additional shelves, 16" cabinet depth and recessed pulls available; consult factory.

How to Specify

Step 1. Product Number

LUCW Wall Case

Step 2. Height

24 24" high **30** 30" high

Step 3. Width

24 24" wide **30** 30" wide **36** 36" wide
48 48" wide

Step 4. Solid Door, Hinge Location, Pull Type

SLB Single, Left, Bar **SRB** Single, Right, Bar
SDB Double, Bar

Step 5. Locking/Non-Locking

N Non-Locking **L** Locking

Step 6. Paint Color Code

BK Black **GL** Grey Light Smooth
NW Neutral White

Product Number	Description	Height		Width		Depth		Weight	
		in.	[mm]	in.	[mm]	in.	[mm]	lb.	[kg]
LUCW2424SLBN	Left hinged, single door, non-locking	24	610	24	610	13	330	55	24.9
LUCW2424SRBN	Right hinged, single door, non-locking	24	610	24	610	13	330	55	24.9
LUCW2430SDBN	Double door, non-locking	24	610	30	762	13	330	70	31.8
LUCW2436SDBN	Double door, non-locking	24	610	36	914	13	330	80	36.3
LUCW2448SDBN	Double door, non-locking	24	610	48	1219	13	330	100	45.4
LUCW3024SLBN	Left hinged, single door, non-locking	31	787	24	610	13	330	70	31.8
LUCW3024SRBN	Right hinged, single door, non-locking	31	787	24	610	13	330	70	31.8
LUCW3030SDBN	Double door, non-locking	31	787	30	762	13	330	85	38.6
LUCW3036SDBN	Double door, non-locking	31	787	36	914	13	330	95	43.1
LUCW3048SDBN	Double door, non-locking	31	787	48	1219	13	330	125	56.7
LUCW2424SLBL	Left hinged, single door, locking	24	610	24	610	13	330	55	24.9
LUCW2424SRBL	Right hinged, single door, locking	24	610	24	610	13	330	55	24.9
LUCW2430SDBL	Double door, locking	24	610	30	762	13	330	70	31.8
LUCW2436SDBL	Double door, locking	24	610	36	914	13	330	80	36.3
LUCW2448SDBL	Double door, locking	24	610	48	1219	13	330	100	45.4
LUCW3024SLBL	Left hinged, single door, locking	31	787	24	610	13	330	70	31.8
LUCW3024SRBL	Right hinged, single door, locking	31	787	24	610	13	330	70	31.8
LUCW3030SDBL	Double door, locking	31	787	30	762	13	330	85	38.6
LUCW3036SDBL	Double door, locking	31	787	36	914	13	330	95	43.1
LUCW3048SDBL	Double door, locking	31	787	48	1219	13	330	125	56.7

Rev 01/16/20

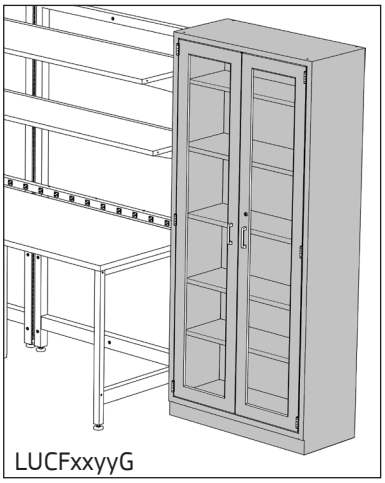
LUCFxxyyG

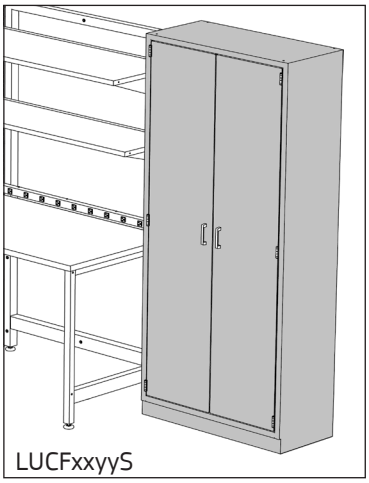
LUCFxxyyS

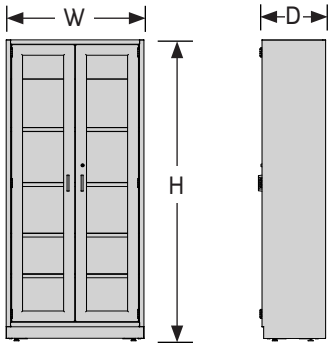

FLOOR CASES

- Built to SEFA standards, Cabinets are constructed of welded 18 and 20 gauge steel with a chemical resistant epoxy powder coat paint finish.
- Solid or glass double doors are available with or without locks.
- Five full depth adjustable shelves are included with each floor case.
- Sound deadened doors have "double pan" construction with a bar pull.
- Doors have 5-knuckle stainless steel institutional type hinges.
- All standard floor cases are 16" deep.
- Available with or without locks. Locking cabinets with multiple doors/drawers per unit will have the same key number per unit. Individual units will be keyed randomly and differently from the other. Contact factory for other keying options. Available key numbers are LL226 thru LL327.

NOTES

» Floor cases are free-standing and not intended to attach to a frame.
» Floor cases must be secured to a wall or otherwise supported vertically.
» Leveling glides included for stability adjustment.
» Standard depth is 16", consult factory for pricing on 21¼" deep floor cases.

How to Specify

Step 1. Product Number

LUCF Floor Case

Step 2. Depth

16 16" deep

Step 3. Width

36 36" wide **48** 48" wide

Step 4. Door Type, Pull Type

SDB Solid, Double,Bar **GDB** Glass, Double, Bar

Step 5. Locking/Non-Locking

N Non-Locking **L** Locking

Step 6. Paint Color Code

BK Black
GL Grey Light Smooth
NW Neutral White

Product Number	Description	Height		Width		Depth		Weight	
		in.	[mm]	in.	[mm]	in.	[mm]	lb.	[kg]
LUCF1636SDBN	Double solid door, non-locking	84	2134	36	914	16	406	300	136.1
LUCF1636GDBN	Double glass door, non-locking	84	2134	36	914	16	406	305	138.3
LUCF1648SDBN	Double solid door, non-locking	84	2134	48	1219	16	406	380	172.4
LUCF1648GDBN	Double glass door, non-locking	84	2134	48	1219	16	406	390	176.9
LUCF1636SDBL	Double solid door, locking	84	2134	36	914	16	406	300	136.1
LUCF1636GDBL	Double glass door, locking	84	2134	36	914	16	406	305	138.3
LUCF1648SDBL	Double solid door, locking	84	2134	48	1219	16	406	380	172.4
LUCF1648GDBL	Double glass door, locking	84	2134	48	1219	16	406	390	176.9

Rev 01/16/20

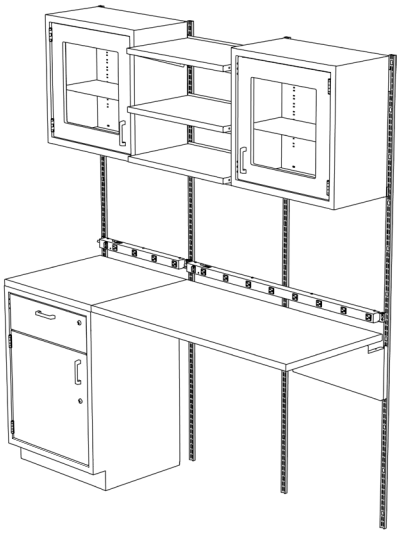

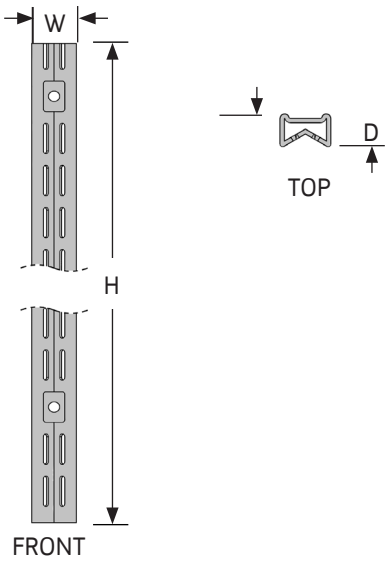

WALL STRIPS

- Sold individually, Wall Strips attach with wall fasteners to a structural wall to support hanging components. Two wall strips are required to hang a component.
- The 60" wall strip requires 8 fasteners; the 72" wall strip requires 9 fasteners; and the 84" wall strip requires 11 fasteners.
- Sold individually, not in pairs.

NOTES

» Wall fasteners not included; consult factory.

How to Specify

Step 1. Product Number

WS Wall Strip

Step 2. Height

60 60" high **72** 72" high **84** 84" high

Step 3. Paint Color Code

BK Black
GL Grey Light Smooth
NW Neutral White

Product Number	Description	Height		Width		Depth		Weight	
		in.	[mm]	in.	[mm]	in.	[mm]	lb.	[kg]
WS60	Wall strip	60	1524	1	25	¾	19	3	1.4
WS72	Wall strip	72	1829	1	25	¾	19	3	1.4
WS84	Wall strip	84	2134	1	25	¾	19	3	1.4

Rev 01/29/25

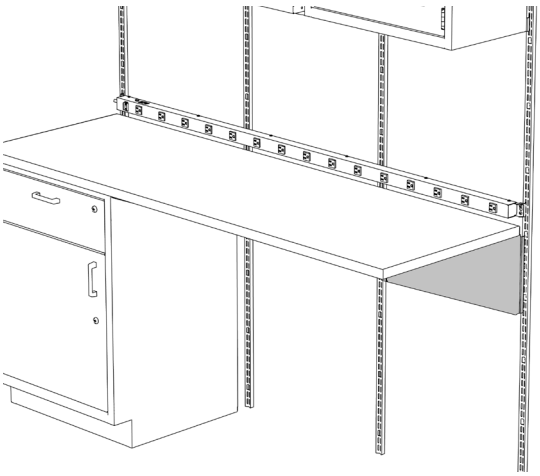

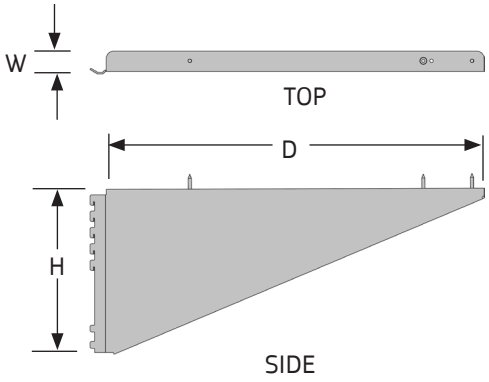

CANTILEVER BRACKETS

- Lab Cantilever Brackets provide manual height adjustable support for 24" and 30" deep work surfaces mounted to UltraFrames supported by Lab Legs.
- Cantilevers also provide mid support for surfaces wider than 60".

NOTES

» Use 24" cantilevers with 24" and 30" deep surfaces. 36" deep surfaces should be supported with Lab Legs and Adjacent Brackets; see pages 10.27-10.29.

» 72" and 96" wide frame-mounted surfaces must be supported in the center by Lab Cantilever Brackets. Specify one 18" cantilever per 24" and 30" deep surface and one 24" cantilever per 36" deep surface.

» Cantilever brackets cannot be used with Lab Reinforcement Bars.

How to Specify

Step 1. Product Number

LUSC Cantilever Bracket

Step 2. Location

L Left **R** Right

Step 3. Depth

18 18" deep **24** 24" deep

Step 4. Paint Color Code

BK Black
GL Grey Light Smooth
NW Neutral White

Product Number	Description	Height		Width		Depth		Weight	
		in.	[mm]	in.	[mm]	in.	[mm]	lb.	[kg]
LUSCL18	Left	8 ½	216	1 ¼	32	18 ¼	464	4	1.8
LUSCR18	Right	8 ½	216	1 ¼	32	18 ¼	464	4	1.8
LUSCL24	Left	10 ½	267	1 ¼	32	24 ¼	616	5	2.3
LUSCR24	Right	10 ½	267	1 ¼	32	24 ¼	616	5	2.3

Rev 07/07/10

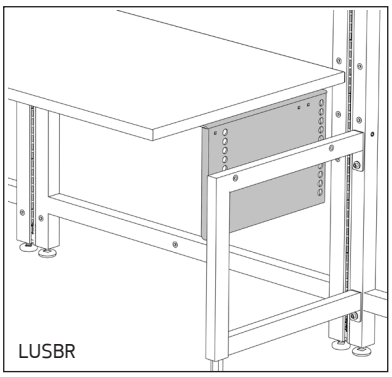

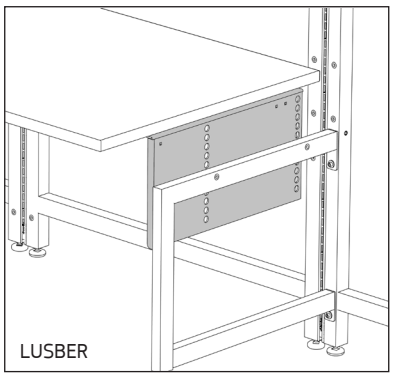

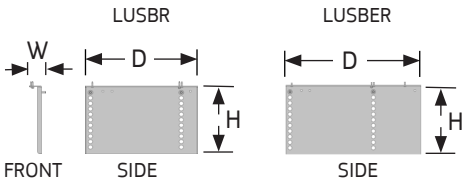

LAB HEIGHT B SUPPORTS

- Brackets provide manual height adjustable support for Ultra or Work Surfaces mounted to Ultra Leg Supports.
- Height range is 26⅛" to 36⅛" for CLM and 31⅛" to 41⅛" for CLT.
- Lab Height B Supports allow for surface height alignment with Lab Leg mounted surfaces and provide clearance for Base Cabinets at the nominal 29" and 35" bracket heights.
- Extended brackets are for use with 36" deep surfaces, while the 18⅝" deep brackets are for use with 24" and 30" deep surfaces.

NOTES

» 72" and 96" frame-mounted surfaces must be supported in the center by Lab Cantilever Brackets. Specify one 18" cantilever per 24" and 30" deep surface and one 24" cantilever per 36" deep surface.

How to Specify

Step 1. Product Number

LUSB B Support
LUSBE B Support, extended

Step 2. Location

L Left **R** Right

Step 3. Adjustment Range

10 10" high

Step 4. Paint Color Code

STANDARD

AW Arctic White
AS Argent Silver
BK Black
BT Black Texture
GL Grey Light Smooth
GT Grey Light Texture
NW Neutral White
ST Sand Texture

Product Number	Description	Height		Width		Depth		Weight	
		in.	[mm]	in.	[mm]	in.	[mm]	lb.	[kg]
LUSBL10	Left	12 ½	318	2 ¼	57	18 ⅝	473	12 ½	5.7
LUSBR10	Right	12 ½	318	2 ¼	57	18 ⅝	473	12 ½	5.7
LUSBEL10	Left, extended	12 ½	318	2 ¼	57	24 ⅝	625	16 ½	7.5
LUSBER10	Right, extended	12 ½	318	2 ¼	57	24 ⅝	625	16 ½	7.5

04/01/19

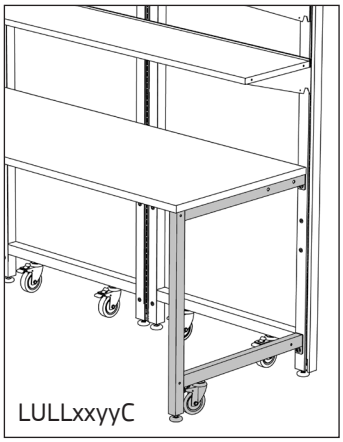

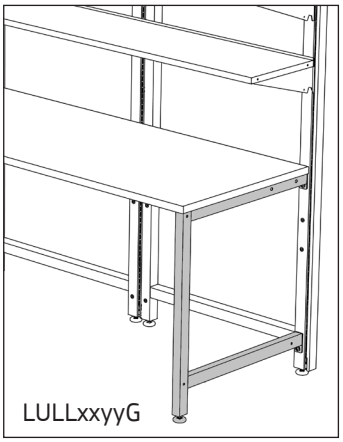

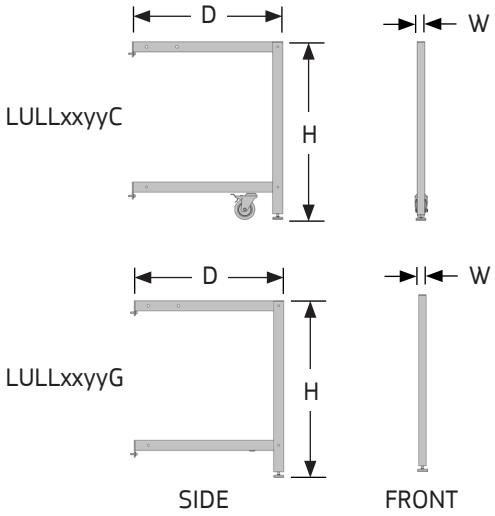

LAB LEGS

- Lab Legs provide standing support for UltraFrames.
- Legs bolt to connection points on both the front and back sides of UltraFrames and Connector Posts (80" high max).
- Legs are each equipped with a leveling glide. Lab Legs with Casters also include a 4" diameter polypropylene caster with totalock brake (simultaneously locks swivel and wheel) and can only be attached to UltraFrames with Casters. Lab legs with Glides bolt to UltraFrames with Glides or Connector Posts.
- Lab Legs cannot be used to support 96" high UltraFrames.
- Surfaces can be mounted directly to the top of Lab Legs mounted inboard of the frame. Outboard mounted Lab Legs require Adjacent Brackets to support the surface.

NOTES

» The nominal Lab Leg depth must match the nominal surface depth.
» Adjacent Brackets sold separately; see page 10.28.

How to Specify

Step 1. Product Number

LULL Lab Leg

Step 2. Height

29 29" high **35** 35" high

Step 3. Depth

24 24" deep **30** 30" deep **36** 36" deep

Step 4. Casters or Glide

C Casters **G** Glide

Step 5. Paint Color Code

BK Black
GL Grey Light Smooth
NW Neutral White

Product Number	Description	Height		Width		Depth		Weight	
		in.	[mm]	in.	[mm]	in.	[mm]	lb.	[kg]
LULL2924C	Caster	29	737	1 ½	38	23 ¾	603	13	5.9
LULL2924G	Glide	29	737	1 ½	38	23 ¾	603	13	5.9
LULL2930C	Caster	29	737	1 ½	38	29 ¾	756	14	6.4
LULL2930G	Glide	29	737	1 ½	38	29 ¾	756	14	6.4
LULL2936C	Caster	29	737	1 ½	38	35 ¾	908	15	6.8
LULL2936G	Glide	29	737	1 ½	38	35 ¾	908	15	6.8
LULL3524C	Caster	35	889	1 ½	38	23 ¾	603	14	6.4
LULL3524G	Glide	35	889	1 ½	38	23 ¾	603	14	6.4
LULL3530C	Caster	35	889	1 ½	38	29 ¾	756	15	6.8
LULL3530G	Glide	35	889	1 ½	38	29 ¾	756	15	6.8
LULL3536C	Caster	35	889	1 ½	38	35 ¾	908	16	7.3
LULL3536G	Glide	35	889	1 ½	38	35 ¾	908	16	7.3

Rev 10/20/10

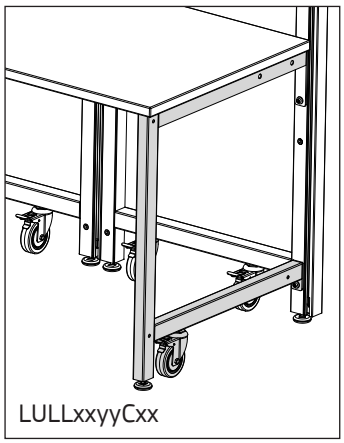
LULLxxyyCxx

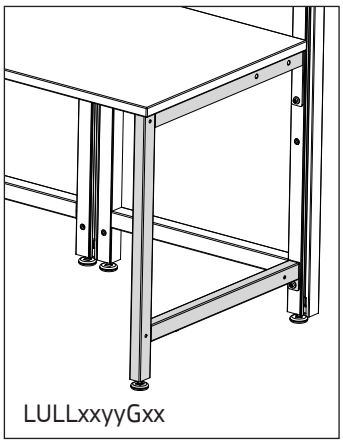
LULLxxyyGxx

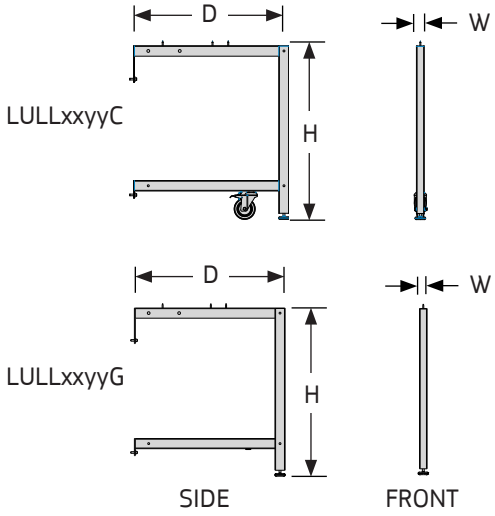

LAB LEGS, ADA

- ADA Lab Legs provide standing support for UltraFrames.
- Legs bolt to connection points on both the front and back sides of UltraFrames and Connector Posts (80" high max).
- Legs are each equipped with a leveling glide. Lab Legs with Casters also include a 4" diameter polypropylene caster with totalock brake (simultaneously locks swivel and wheel) and can only be attached to UltraFrames with Casters. Lab legs with Glides bolt to UltraFrames with Glides or Connector Posts.
- ADA Lab Legs cannot be used to support 96" high UltraFrames.
- Surfaces can be mounted directly to the top of Lab Legs mounted inboard of the frame. Outboard mounted Lab Legs require Adjacent Brackets to support the surface.

NOTES

» The nominal Lab Leg depth must match the nominal surface depth.
» Adjacent Brackets sold separately; see page 10.28.

How to Specify

Step 1. Product Number

LULL Lab Leg, ADA

Step 2. Height

33 33" high

Step 3. Depth

24 24" deep **30** 30" deep **36** 36" deep

Step 4. Casters or Glide

C Casters **G** Glide

Step 5. Paint Color Code

BK Black
GL Grey Light Smooth
NW Neutral White

Product Number	Description	Height		Width		Depth		Weight	
		in.	[mm]	in.	[mm]	in.	[mm]	lb.	[kg]
LULL3324C	Caster	33	838	1 ½	38	23 ¾	603	16	7.3
LULL3324G	Glide	33	838	1 ½	38	23 ¾	603	16	7.3
LULL3330C	Caster	33	838	1 ½	38	29 ¾	756	17	7.7
LULL3330G	Glide	33	838	1 ½	38	29 ¾	756	17	7.7
LULL3336C	Caster	33	838	1 ½	38	35 ¾	908	18	8.2
LULL3336G	Glide	33	838	1 ½	38	35 ¾	908	18	8.2

Rev 08/20/20

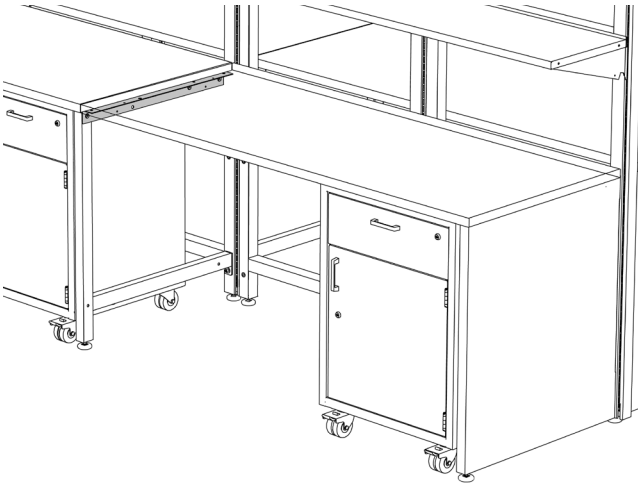

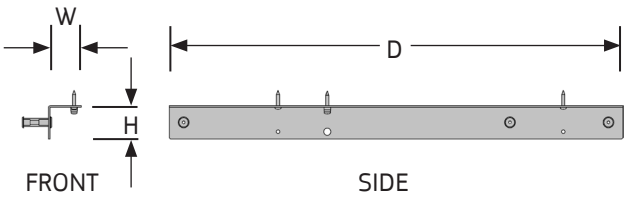

ADJACENT BRACKETS

- Adjacent Brackets provide fixed height support for work surfaces mounted to Lab Legs outboard of the UltraFrame.
- Brackets can be used in conjunction with Lab Leg Panels and Lab Reinforcement Bars.

NOTES

» Order nominal bracket depth to match surface depth.

How to Specify

Step 1. Product Number

LUSA Adjacent Bracket

Step 2. Depth

24 24" deep **30** 30" deep **36** 36" deep

Step 3. Paint Color Code

BK Black
GL Grey Light Smooth
NW Neutral White

Product Number	Description	Height		Width		Depth		Weight	
		in.	[mm]	in.	[mm]	in.	[mm]	lb.	[kg]
LUSA24	Adjacent bracket	2	51	2	51	21 ½	546	2	0.9
LUSA30	Adjacent bracket	2	51	2	51	27 ½	699	3	1.4
LUSA36	Adjacent bracket	2	51	2	51	33 ½	851	3	1.4

Rev 03/29/10

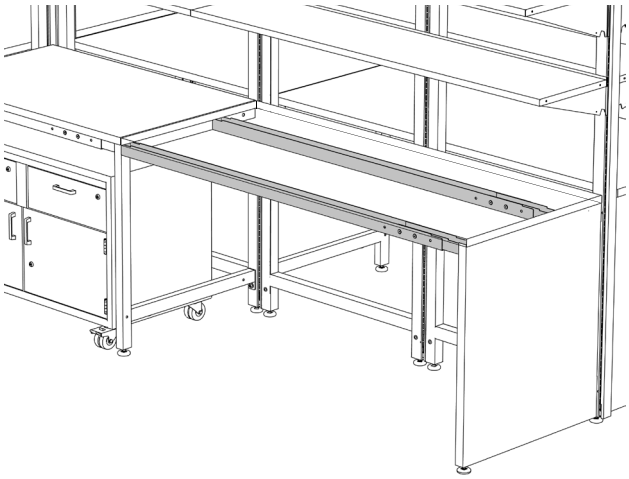

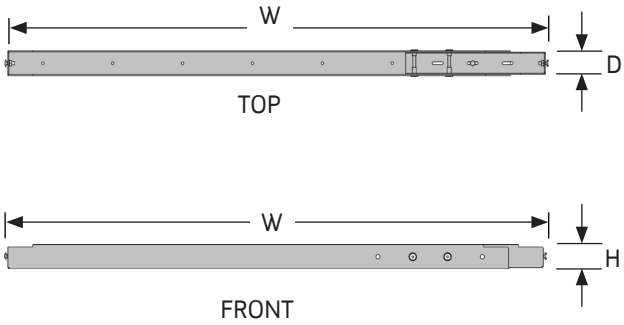

SURFACE REINFORCEMENT BARS

- Lab Reinforcement Bars provide horizontal support under work surfaces for increased rigidity.
- Bars are sold in pairs and mount at the front and 20" behind the front of Lab Legs.
- Bars adjust over a 6" range to accomodate inboard and outboard Lab Legs and Adjacent Bracket clearance.
- Finish is Black.

NOTES

» Lab Reinforcement Bars cannot be used with Lab Cantilever Brackets.

How to Specify

Step 1. Product Number

LUSR Surface Reinforcement Bars, pair

Step 2. Width

48 48" wide **60** 60" wide **72** 72" wide

Step 3. Paint Color Code

BK Black

Product Number	Description	Height		Width		Depth		Weight	
		in.	[mm]	in.	[mm]	in.	[mm]	lb.	[kg]
LUSR48BK	Reinforcement bars, pair	2	51	43 ½ - 49 ½	1105 - 1257	2	51	15	6.8
LUSR60BK	Reinforcement bars, pair	2	51	55 ½ - 61 ½	1410 - 1562	2	51	18	8.2
LUSR72BK	Reinforcement bars, pair	2	51	67 ½ - 73 -½	1715 - 1867	2	51	24	10.9

Rev 10/20/10

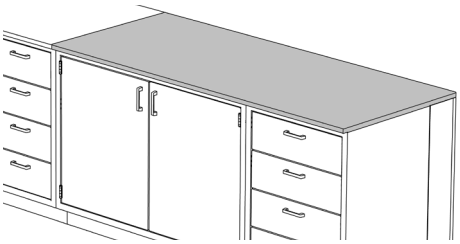

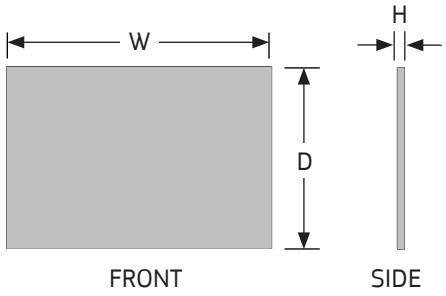

PHENOLIC LAB SURFACES

- 1" high solid Phenolic Lab Surfaces are full width and depth and can be mounted to Base Cabinets and/or surface supports.
- Surfaces have smooth ⅛" radius corners and edges.
- Surfaces are not predrilled, but include a drip groove inset from the front edge of the surface.
- Phenolic resin material is specifically manufactured for highly corrosive environments and provides exceptional chemical and wear resistance. Contact factory for detailed chemical resistance testing data.
- Load capacity 300 lbs. evenly distributed when supported every five feet.
- Finish is Black.

NOTES

» Mounting hardware is not included; recommended attaching method is silicone adhesive.

» See Section 4 for Phenolic Backsplash.

How to Specify

Step 1. Product Number

LUTP Phenolic Lab Surface

Step 2. Depth

24 24" deep **30** 30" deep **36** 36" deep

Step 3. Width

24 24" wide **30** 30" wide **36** 36" wide
48 48" wide **60** 60" wide **72** 72" wide
96 96" wide **120** 120" wide

Step 4. Color Code

BK Black

Product Number	Description	Height		Width		Depth		Weight	
		in.	[mm]	in.	[mm]	in.	[mm]	lb.	[kg]
LUTP2424BK	Phenolic lab surface	1	25	24	610	24	610	29	13.2
LUTP2430BK	Phenolic lab surface	1	25	30	762	24	610	36	16.3
LUTP2436BK	Phenolic lab surface	1	25	36	914	24	610	43	19.5
LUTP2448BK	Phenolic lab surface	1	25	48	1219	24	610	58	26.3
LUTP2460BK	Phenolic lab surface	1	25	60	1524	24	610	72	32.7
LUTP2472BK	Phenolic lab surface	1	25	72	1829	24	610	86	39.0
LUTP2496BK	Phenolic lab surface	1	25	96	2438	24	610	115	52.2
LUTP24120BK	Phenolic lab surface	1	25	120	3048	24	610	144	65.3
LUTP3024BK	Phenolic lab surface	1	25	24	610	30	762	36	16.3
LUTP3030BK	Phenolic lab surface	1	25	30	762	30	762	45	20.4
LUTP3036BK	Phenolic lab surface	1	25	36	914	30	762	54	24.5
LUTP3048BK	Phenolic lab surface	1	25	48	1219	30	762	72	32.7
LUTP3060BK	Phenolic lab surface	1	25	60	1524	30	762	90	40.8
LUTP3072BK	Phenolic lab surface	1	25	72	1829	30	762	108	49.0
LUTP3096BK	Phenolic lab surface	1	25	96	2438	30	762	144	65.3
LUTP30120BK	Phenolic lab surface	1	25	120	3048	30	762	180	81.6
LUTP3624BK	Phenolic lab surface	1	25	24	610	36	914	43	19.5
LUTP3630BK	Phenolic lab surface	1	25	30	762	36	914	54	24.5
LUTP3636BK	Phenolic lab surface	1	25	36	914	36	914	65	29.5
LUTP3648BK	Phenolic lab surface	1	25	48	1219	36	914	86	39.0
LUTP3660BK	Phenolic lab surface	1	25	60	1524	36	914	108	49.0
LUTP3672BK	Phenolic lab surface	1	25	72	1829	36	914	130	59.0
LUTP3696BK	Phenolic lab surface	1	25	96	2438	36	914	173	78.5
LUTP36120BK	Phenolic lab surface	1	25	120	3048	36	914	216	98.0

Rev 03/20/12

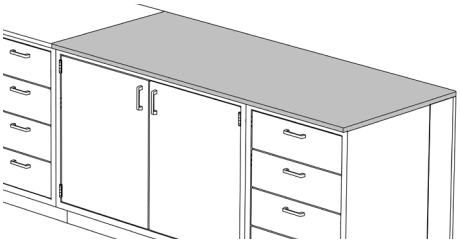

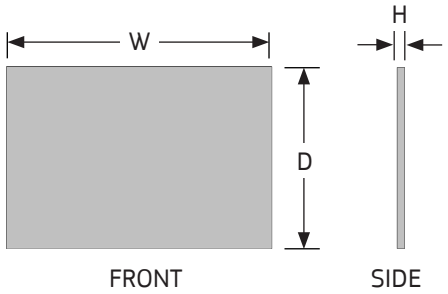

EPOXY LAB SURFACES

- 1" high Epoxy Lab Surfaces have smooth ⅛" beveled top front edge. All other edges and corners have a slight break.
- Surfaces are full width and depth and can be mounted to Base Cabinets and/or surface supports.
- Surfaces are not predrilled, but include a drip groove inset from the front edge of the surface (or underside of sink top exposed edges).
- Load capacity 300 lbs. evenly distributed (supported every five feet).
- Surfaces are specially compounded and cured to produce excellent physical, chemical, and heat resistance. Contact factory for detailed testing data.
- Non-glaring matte finish and black in color.

NOTES

» Mounting hardware not included; recommended attaching method is an approved epoxy adhesive or silicone.
» See Section 4 for Epoxy Resin Backsplash.
» Other colors available; Premium pricing. Consult factory.

How to Specify

Step 1. Product Number

LUTE Epoxy Lab Surfaces

Step 2. Depth

24 24" deep **30** 30" deep **36** 36" deep

Step 3. Width

24 24" wide **30** 30" wide **36** 36" wide
48 48" wide **60** 60" wide **72** 72" wide
96 96" wide

Step 4. Color Code

BK Black

PRODUCT NUMBER	DESCRIPTION	HEIGHT		WIDTH		DEPTH		WEIGHT	
		IN.	[MM]	IN.	[MM]	IN.	[MM]	LB.	[KG]
LUTE2424BK	Epoxy Lab Surface	1	25	24	610	24	610	44	20.0
LUTE2430BK	Epoxy Lab Surface	1	25	30	762	24	610	55	24.9
LUTE2436BK	Epoxy Lab Surface	1	25	36	914	24	610	66	29.9
LUTE2448BK	Epoxy Lab Surface	1	25	48	1219	24	610	88	39.9
LUTE2460BK	Epoxy Lab Surface	1	25	60	1524	24	610	110	49.9
LUTE2472BK	Epoxy Lab Surface	1	25	72	1829	24	610	132	59.9
LUTE2496BK	Epoxy Lab Surface	1	25	96	2438	24	610	176	79.8
LUTE3024BK	Epoxy Lab Surface	1	25	24	610	30	762	55	24.9
LUTE3030BK	Epoxy Lab Surface	1	25	30	762	30	762	69	31.2
LUTE3036BK	Epoxy Lab Surface	1	25	36	914	30	762	83	37.4
LUTE3048BK	Epoxy Lab Surface	1	25	48	1219	30	762	110	49.9
LUTE3060BK	Epoxy Lab Surface	1	25	60	1524	30	762	138	62.4
LUTE3072BK	Epoxy Lab Surface	1	25	72	1829	30	762	165	74.8
LUTE3096BK	Epoxy Lab Surface	1	25	96	2438	30	762	220	99.8
LUTE3624BK	Epoxy Lab Surface	1	25	24	610	36	914	66	29.9
LUTE3630BK	Epoxy Lab Surface	1	25	30	762	36	914	83	37.4
LUTE3636BK	Epoxy Lab Surface	1	25	36	914	36	914	99	44.9
LUTE3648BK	Epoxy Lab Surface	1	25	48	1219	36	914	132	59.9
LUTE3660BK	Epoxy Lab Surface	1	25	60	1524	36	914	165	74.8
LUTE3672BK	Epoxy Lab Surface	1	25	72	1829	36	914	198	89.8
LUTE3696BK	Epoxy Lab Surface	1	25	96	2438	36	914	264	119.7

Rev 5/15/24

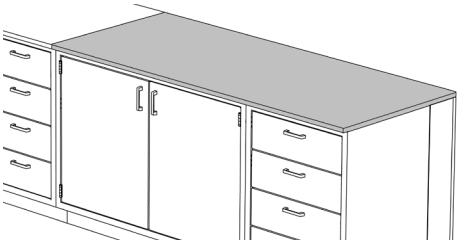

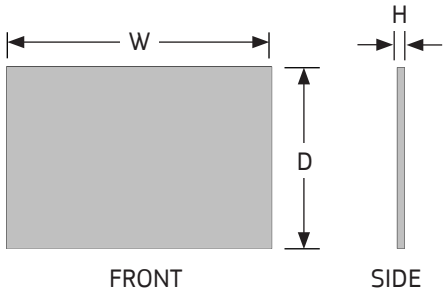

GREENSTONE EPOXY LAB SURFACES

- 1" high Greenstone Epoxy Lab Surfaces have smooth ⅛" beveled top front edge. All other edges and corners have a slight break.
- Surfaces are full width and depth and can be mounted to Base Cabinets and/or surface supports.
- Surfaces are not predrilled, but include a drip groove inset from the front edge of the surface (or underside of sink top exposed edges).
- Load capacity 300 lbs. evenly distributed (supported every five feet).
- Surfaces are compounded and cured to produce excellent physical, chemical, and heat resistance. Contact factory for testing data.
- Non-glaring matte finish and black in color.
- Greenstone epoxy resin contains a minimum 10% recycled content and low VEC levels.

NOTES

» Mounting hardware not included; recommended attaching method is an approved epoxy adhesive or silicone.
» See Section 4 for Epoxy Resin Backsplash.
» Other colors available; Premium pricing. Consult factory.

How to Specify

Step 1. Product Number

LUTG Greenstone Epoxy Lab Surfaces

Step 2. Depth

24 24" deep **30** 30" deep **36** 36" deep

Step 3. Width

24 24" wide **30** 30" wide **36** 36" wide
48 48" wide **60** 60" wide **72** 72" wide
96 96" wide

Step 4. Color Code

BK Black

PRODUCT NUMBER	DESCRIPTION	HEIGHT		WIDTH		DEPTH		WEIGHT	
		IN.	[MM]	IN.	[MM]	IN.	[MM]	LB.	[KG]
LUTG2424BK	Greenstone Epoxy Lab Surface	1	25	24	610	24	610	44	20.0
LUTG2430BK	Greenstone Epoxy Lab Surface	1	25	30	762	24	610	55	24.9
LUTG2436BK	Greenstone Epoxy Lab Surface	1	25	36	914	24	610	66	29.9
LUTG2448BK	Greenstone Epoxy Lab Surface	1	25	48	1219	24	610	88	39.9
LUTG2460BK	Greenstone Epoxy Lab Surface	1	25	60	1524	24	610	110	49.9
LUTG2472BK	Greenstone Epoxy Lab Surface	1	25	72	1829	24	610	132	59.9
LUTG2496BK	Greenstone Epoxy Lab Surface	1	25	96	2438	24	610	176	79.8
LUTG3024BK	Greenstone Epoxy Lab Surface	1	25	24	610	30	762	55	24.9
LUTG3030BK	Greenstone Epoxy Lab Surface	1	25	30	762	30	762	69	31.2
LUTG3036BK	Greenstone Epoxy Lab Surface	1	25	36	914	30	762	83	37.4
LUTG3048BK	Greenstone Epoxy Lab Surface	1	25	48	1219	30	762	110	49.9
LUTG3060BK	Greenstone Epoxy Lab Surface	1	25	60	1524	30	762	138	62.4
LUTG3072BK	Greenstone Epoxy Lab Surface	1	25	72	1829	30	762	165	74.8
LUTG3096BK	Greenstone Epoxy Lab Surface	1	25	96	2438	30	762	220	99.8
LUTG3624BK	Greenstone Epoxy Lab Surface	1	25	24	610	36	914	66	29.9
LUTG3630BK	Greenstone Epoxy Lab Surface	1	25	30	762	36	914	83	37.4
LUTG3636BK	Greenstone Epoxy Lab Surface	1	25	36	914	36	914	99	44.9
LUTG3648BK	Greenstone Epoxy Lab Surface	1	25	48	1219	36	914	132	59.9
LUTG3660BK	Greenstone Epoxy Lab Surface	1	25	60	1524	36	914	165	74.8
LUTG3672BK	Greenstone Epoxy Lab Surface	1	25	72	1829	36	914	198	89.8
LUTG3696BK	Greenstone Epoxy Lab Surface	1	25	96	2438	36	914	264	119.7

Rev 5/15/24

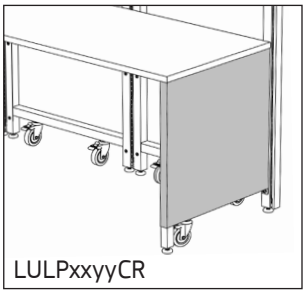
LULPxxyyCR

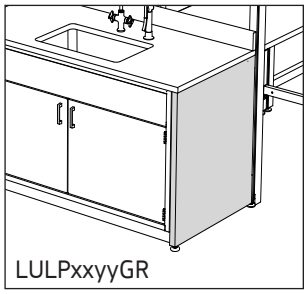
LULPxxyyGR

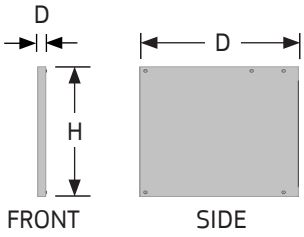

LAB LEG PANELS

- Metal Lab Leg Panels finish the side faces of Lab Legs.
- Lab Leg Panels attach through holes in the Lab Legs with PEM studs and connector nuts.
- Lab Leg Panels for Lab Legs with Casters have clearance at the bottom for caster swivel radius.
- Panels can be used in conjunction with Adjacent Brackets and Reinforcement Bars.

NOTES

» Lab Leg Panels must be ordered with the same nominal height, depth and glide/caster style as the Lab Leg it will mount on.

How to Specify

Step 1. Product Number

LULP Lab Leg Panel

Step 2. Height

29 29" high **35** 35" high

Step 3. Depth

24 24" deep **30** 30" deep **36** 36" deep

Step 4. Casters or Glide

C Casters **G** Glide

Step 5. Location

L Left **R** Right

Step 6. Paint Color Code

BK Black
GL Grey Light Smooth
NW Neutral White

Product Number	Description	Height		Width		Depth		Weight	
		in.	[mm]	in.	[mm]	in.	[mm]	lb.	[kg]
LULP2924CL	Caster, left	23 ¾	603	1 ½	38	23 ¾	603	15	6.8
LULP2924CR	Caster, right	23 ¾	603	1 ½	38	23 ¾	603	15	6.8
LULP2924GL	Glide, left	28	711	1 ½	38	23 ¾	603	15	6.8
LULP2924GR	Glide, right	28	711	1 ½	38	23 ¾	603	15	6.8
LULP2930CL	Caster, left	23 ¾	603	1 ½	38	29 ¾	756	16	7.3
LULP2930CR	Caster, right	23 ¾	603	1 ½	38	29 ¾	756	16	7.3
LULP2930GL	Glide, left	28	711	1 ½	38	29 ¾	756	16	7.3
LULP2930GR	Glide, right	28	711	1 ½	38	29 ¾	756	16	7.3
LULP2936CL	Caster, left	23 ¾	603	1 ½	38	35 ¾	908	17	7.7
LULP2936CR	Caster, right	23 ¾	603	1 ½	38	35 ¾	908	17	7.7
LULP2936GL	Glide, left	28	711	1 ½	38	35 ¾	908	17	7.7
LULP2936GR	Glide, right	28	711	1 ½	38	35 ¾	908	17	7.7
LULP3524CL	Caster, left	29 ¾	756	1 ½	38	23 ¾	603	16	7.3
LULP3524CR	Caster, right	29 ¾	756	1 ½	38	23 ¾	603	16	7.3
LULP3524GL	Glide, left	34	864	1 ½	38	23 ¾	603	16	7.3
LULP3524GR	Glide, right	34	864	1 ½	38	23 ¾	603	16	7.3
LULP3530CL	Caster, left	29 ¾	756	1 ½	38	29 ¾	756	17	7.7
LULP3530CR	Caster, right	29 ¾	756	1 ½	38	29 ¾	756	17	7.7
LULP3530GL	Glide, left	34	864	1 ½	38	29 ¾	756	17	7.7
LULP3530GR	Glide, right	34	864	1 ½	38	29 ¾	756	17	7.7
LULP3536CL	Caster, left	29 ¾	756	1 ½	38	35 ¾	908	18	8.2
LULP3536CR	Caster, right	29 ¾	756	1 ½	38	35 ¾	908	18	8.2
LULP3536GL	Glide, left	34	864	1 ½	38	35 ¾	908	18	8.2
LULP3536GR	Glide, right	34	864	1 ½	38	35 ¾	908	18	8.2

Rev 07/07/10

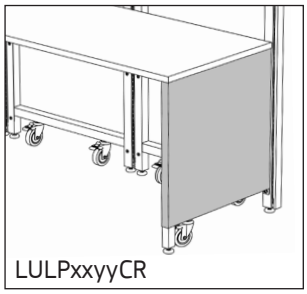
LULPxxyyCR

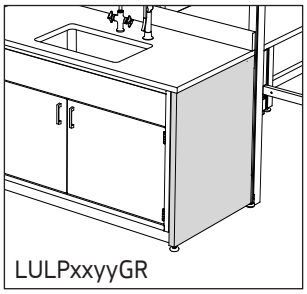
LULPxxyyGR

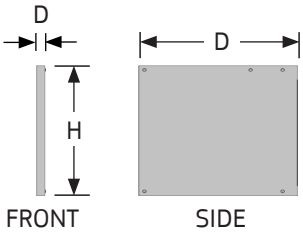

LAB LEG PANELS, ADA

- Metal ADA Lab Leg Panels finish the side faces of ADA Lab Legs.
- ADA Lab Leg Panels attach through holes in the ADA Lab Legs with PEM studs and connector nuts.
- ADA Lab Leg Panels for ADA Lab Legs with Casters have clearance at the bottom for caster swivel radius.
- Panels can be used in conjunction with Adjacent Brackets and Reinforcement Bars.

NOTES

» ADA Lab Leg Panels must be ordered with the same nominal height, depth and glide/caster style as the ADA Lab Leg it will mount on.

How to Specify

Step 1. Product Number

LULP Lab Leg Panel, ADA

Step 2. Height

33 33" high

Step 3. Depth

24 24" deep **30** 30" deep **36** 36" deep

Step 4. Casters or Glide

C Casters **G** Glide

Step 5. Location

L Left **R** Right

Step 6. Paint Color Code

BK Black
GL Grey Light Smooth
NW Neutral White

Product Number	Description	Height		Width		Depth		Weight	
		in.	[mm]	in.	[mm]	in.	[mm]	lb.	[kg]
LULP3324CL	Caster, left	27 ¾	705	1 ½	38	23 ¾	603	16	7.3
LULP3324CR	Caster, right	27 ¾	705	1 ½	38	23 ¾	603	16	7.3
LULP3324GL	Glide, left	32	813	1 ½	38	23 ¾	603	16	7.3
LULP3324GR	Glide, left	32	813	1 ½	38	23 ¾	603	16	7.3
LULP3330CL	Caster, left	27 ¾	705	1 ½	38	29 ¾	756	17	7.7
LULP3330CR	Caster, right	27 ¾	705	1 ½	38	29 ¾	756	17	7.3
LULP3330GL	Glide, left	32	813	1 ½	38	29 ¾	756	17	7.3
LULP3330GR	Glide, right	32	813	1 ½	38	29 ¾	756	17	7.7
LULP3336CL	Caster, left	27 ¾	705	1 ½	38	35 ¾	908	18	8.2
LULP3336CR	Caster, right	27 ¾	705	1 ½	38	35 ¾	908	18	8.2
LULP3336GL	Glide, left	32	813	1 ½	38	35 ¾	908	18	8.2
LULP3336GR	Glide, right	32	813	1 ½	38	35 ¾	908	18	8.2

Rev 08/20/20

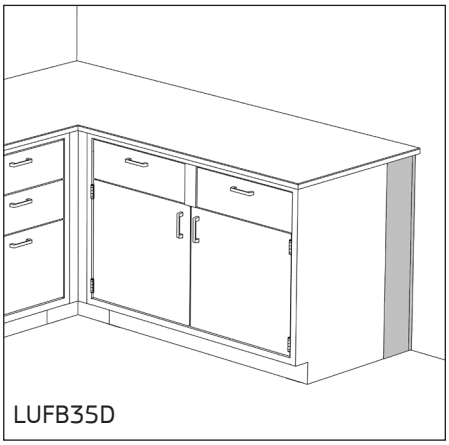

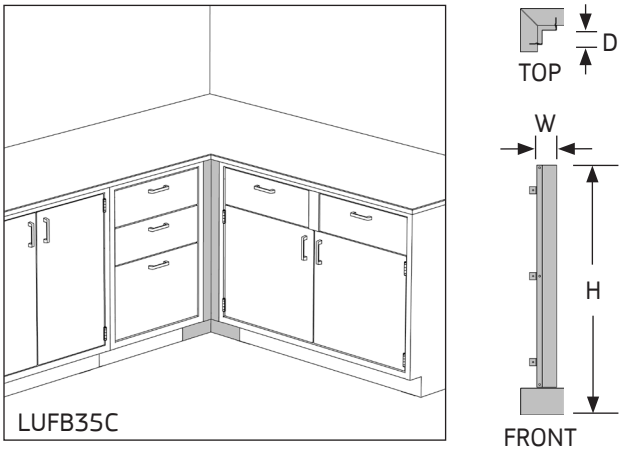

LAB CABINET FILLERS

Rear Base Cabinet Fillers

- Rear Fillers are used in the space between the rear of the cabinet and the wall.
- Fillers provide a clean finished look when surfaces are deeper than the base cabinets and conceal any utilities that are routed behind cabinets.
- Includes a filler panel and a slip joint, which mounts to the wall.

Inside Corner Base Cabinet Fillers

- Corner Fillers are used where two base cabinets meet at a ninety degree angle.
- Includes an angled filler panel, which provides either 1", 2" or 4" clearance between cabinet fronts, mounting clips to attach the filler to the cabinets, and a toekick to conceal cabinet spacing.

NOTES

» Hardware is not provided to mount filler slip joint to wall.

How to Specify

Step 1. Product Number

LUFB Lab Cabinet Filler

Step 2. Height

35 35" high

Step 3. Location

C Inside Corner **D** Rear

Step 4. Width (Inside Corner Only)

01 1" wide **02** 2" wide **04** 4" wide

Step 5. Depth (Deep Surface Only)

24 24" deep **30"** 30" deep **36** 36" deep

Step 6. Paint Color Code

BK Black
GL Grey Light Smooth
NW Neutral White

Product Number	Description	Height		Width		Depth		Weight	
		in.	[mm]	in.	[mm]	in.	[mm]	lb.	[kg]
LUFB35C01	Inside corner	35	889	1	25	1	25	7	3.2
LUFB35C02	Inside corner	35	889	2	51	2	51	8	3.6
LUFB35C04	Inside corner	35	889	4	102	4	102	9	4.1
LUFB35D24	Rear, 24” deep surface	35	889	1	25	1	25	3	1.4
LUFB35D30	Rear, 30” deep surface	35	889	1	25	7	178	4	1.8
LUFB35D36	Rear, 36” deep surface	35	889	1	25	13	330	7	3.2

Rev 10/20/10

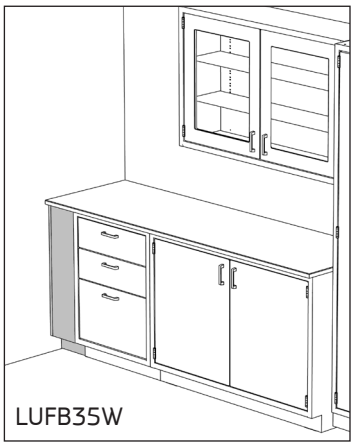

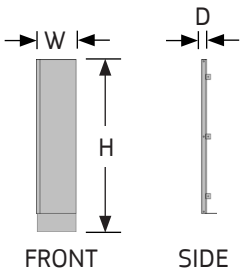



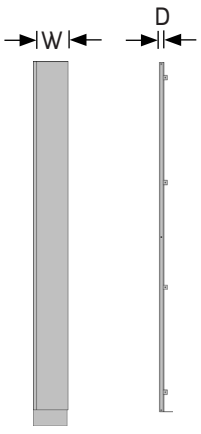

LAB CABINET FILLERS, CONT'D

Front Cabinet Fillers

- Front Fillers are used when there is excess space between the side of the Base Cabinet or Floor Case and a wall.
- Filler kit includes a filler panel, mounting clips to attach the filler to the cabinet, a slip joint, which mounts to the wall and a toekick to conceal cabinet spacing.
- Filler panel and toekick can be cut to width in the field to accommodate custom spacing.

NOTES

» Hardware is not provided to mount filler slip joint to wall.

» It is not recommended to cut cabinet fillers shorter than 1.5" in width to ensure they fully engage the slip joint assembly.

How to Specify

Step 1. Product Number

LUFB Front Cabinet Filler

Step 2. Height

35 35" high **84** 84" high

Step 3. Location

W Wall

Step 4. Width

2 2" wide (floor case only)
8 8" wide
14 14" wide (base only)

Step 5. Paint Color Code

BK Black
GL Grey Light Smooth
NW Neutral White

Product Number	Description	Height		Width		Depth		Weight	
		in.	[mm]	in.	[mm]	in.	[mm]	lb.	[kg]
LUFB35W08	Base cabinets	35	889	8	203	1	25	10	4.5
LUFB35W14	Base cabinets	35	889	14	356	1	25	12	5.4
LUFF84W02	Floor case	84	2134	2	51	1	25	22	10.0
LUFF84W08	Floor case	84	2134	8	203	1	25	25	11.3

Rev 02/20/10

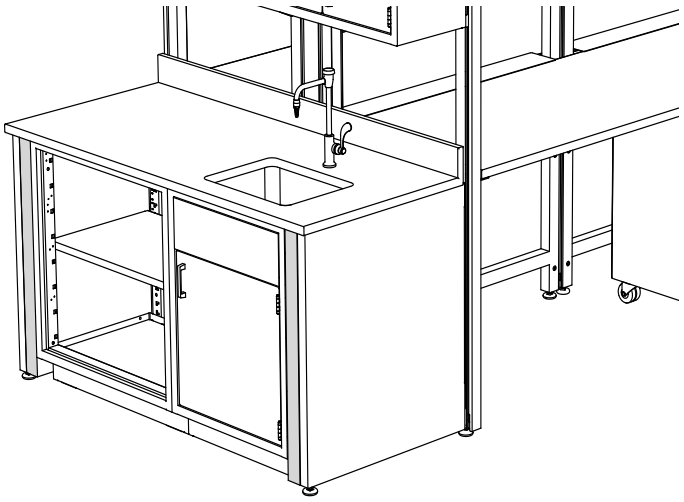

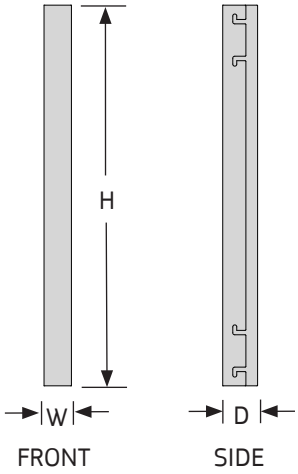

LAB LEG FILLERS

- Lab Leg Fillers are used to fill the gap between Lab Legs and adjacent Base Cabinets in an end of run configuration using a Three-way Connector.
- Fillers mount directly to Lab Legs without the need to add holes or hardware to either the leg or adjacent cabinet.

NOTES

» Hardware to attach Lab Leg Filler is included with the Lab Leg Panel; see page 10.31. If Lab Leg Panels will not be used in conjunction with Lab Leg Fillers, please consult factory for Lab Leg Filler hardware ordering information.

» Order two half gap style fillers if the difference between the total cabinet width and frame run is 9½" or greater. Order a single full gap filler if the cabinet/frame run difference is 5½".

» Two half gap style fillers are shown in the above image.

How to Specify

Step 1. Product Number

LULF Lab Leg Filler

Step 2. Height

35 35" high

Step 3. Width

E01 1" wide **E02** 2½" wide **E03** 3½" wide

Step 4. Paint Color Code

BK Black
GL Grey Light Smooth
NW Neutral White

Product Number	Description	Height		Width		Depth		Weight	
		in.	[mm]	in.	[mm]	in.	[mm]	lb.	[kg]
LULF35E01	Full gap	35	889	1	25	3	76	3	1.4
LULF35E02	Half gap	35	889	2 ½	64	3	76	3 ½	1.6
LULF35E03	Half gap	35	889	3 ½	89	3	76	4	1.8

Rev 10/20/10

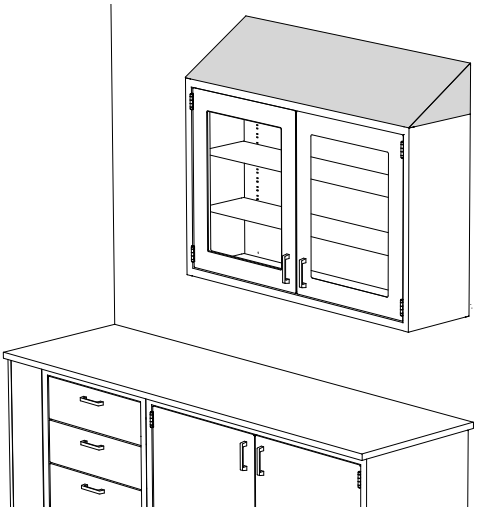

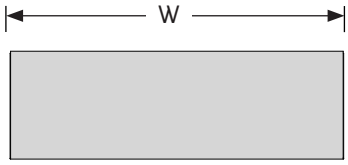

FRONT

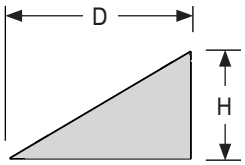

SIDE

SLOPED TOP COVERS

- Covers are made of welded 18 and 20 gauge steel construction with a chemical resistant epoxy powder coat paint finish.
- Slanted top covers inhibit the collection and clutter of items placed on top of wall and floor cases.
- Mounting hardware included.
- Built to SEFA standards.
- Use 13" deep on wall cases; 16" deep on floor cases.

How to Specify

Step 1. Product Number

LUCT Sloped Top Cover

Step 2. Depth

13 13" deep **16** 16" deep

Step 3. Width

24 24" wide **30** 30" wide **36** 36" wide
48 48" wide

Step 4. Paint Color Code

BK Black
GL Grey Light Smooth
NW Neutral White

Product Number	Description	Height		Width		Depth		Weight	
		in.	[mm]	in.	[mm]	in.	[mm]	lb.	[kg]
LUCT1324	Sloped top cover	7 ¾	197	24	610	13	330	4	1.8
LUCT1330	Sloped top cover	7 ¾	197	30	762	13	330	4	1.8
LUCT1336	Sloped top cover	7 ¾	197	36	914	13	330	5	2.3
LUCT1348	Sloped top cover	7 ¾	197	48	1219	13	330	6	2.7
LUCT1636	Sloped top cover	7 ¾	197	36	914	16	406	8	3.6
LUCT1648	Sloped top cover	7 ¾	197	48	1219	16	406	9	4.1

Rev 02/12/18

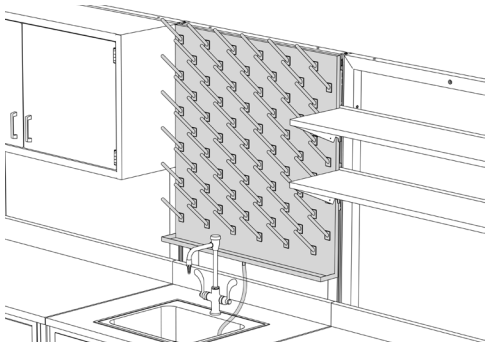

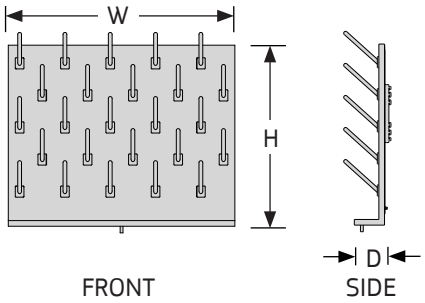

DRAIN BOARD, FRAME-MOUNT

- Frame-mount drain board is constructed of 20 gauge, type 304 stainless steel, polished to a #4 finish.
- Drain boards allow you to quickly dry important, and often fragile, equipment in a sanitary manner.
- Integral stainless steel drip trough included.
- Includes a 3' section of clear plastic drain tubing.

NOTES

» Standard 6" white pegs are included.

How to Specify

Step 1. Product Number

DBF Drain Board, Frame-Mount

Step 2. Height

18 18" high **24** 24" high **30** 30" high
36 36" high

Step 3. Width

24 24" wide **30** 30" wide **36** 36" wide

Step 4. Trough Size

2 2" deep **4** 4" deep

Product Number	Description	Height		Width		Depth		Weight	
		in.	[mm]	in.	[mm]	in.	[mm]	lb.	[kg]
DBF18242	2" drip trough, 16 pegs	18	457	24	610	2	51	22	10.0
DBF18244	4" drip trough, 16 pegs	18	457	24	610	4	102	22	10.0
DBF24242	2" drip trough, 20 pegs	24	610	24	610	2	51	26	11.8
DBF24244	4" drip trough, 20 pegs	24	610	24	610	4	102	26	11.8
DBF24302	2" drip trough, 25 pegs	24	610	30	762	2	51	31	14.1
DBF24304	4" drip trough, 25 pegs	24	610	30	762	4	102	31	14.1
DBF24362	2" drip trough, 30 pegs	24	610	36	914	2	51	33	15.0
DBF24364	4" drip trough, 30 pegs	24	610	36	914	4	102	33	15.0
DBF30242	2" drip trough, 32 pegs	30	762	24	610	2	51	31	14.1
DBF30244	4" drip trough, 32 pegs	30	762	24	610	4	102	31	14.1
DBF30302	2" drip trough, 50 pegs	30	762	30	762	2	51	38	17.2
DBF30304	4" drip trough, 50 pegs	30	762	30	762	4	102	38	17.2
DBF30362	2" drip trough, 60 pegs	30	762	36	914	2	51	39	17.7
DBF30364	4" drip trough, 60 pegs	30	762	36	914	4	102	39	17.7
DBF36242	2" drip trough, 40 pegs	36	914	24	610	2	51	34	15.4
DBF36244	4" drip trough, 40 pegs	36	914	24	610	4	102	34	15.4
DBF36302	2" drip trough, 40 pegs	36	914	30	762	2	51	39	17.7
DBF36304	4" drip trough, 40 pegs	36	914	30	762	4	102	39	17.7
DBF36362	2" drip trough, 66 pegs	36	914	36	914	2	51	42	19.1
DBF36364	4" drip trough, 66 pegs	36	914	36	914	4	102	42	19.1

Rev 02/12/18

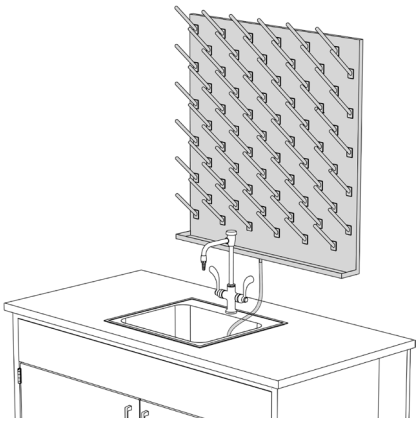

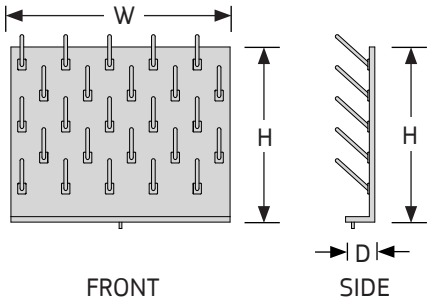

DRAIN BOARD, WALL-MOUNT

- Wall mount drain board is constructed of 20 gauge, type 304 stainless steel, polished to a #4 finish.
- Drain boards allow you to quickly dry important, and often fragile, equipment in a sanitary manner.
- Integral stainless steel drip trough included.
- Includes a 3' section of clear plastic drain tubing.

NOTES

» Standard 6" white pegs are included.

How to Specify

Step 1. Product Number

DBW Drain Board, Wall-Mount

Step 2. Height

18 18" high **24** 24" high **30** 30" high
36 36" high

Step 3. Width

24 24" wide **30** 30" wide **36** 36" wide

Step 4. Trough Size

2 2" deep **4** 4" deep

Product Number	Description	Height		Width		Depth		Weight	
		in.	[mm]	in.	[mm]	in.	[mm]	lb.	[kg]
DBW18242	2” drip trough, 16 pegs	18	457	24	610	2	51	13	5.9
DBW18244	4” drip trough, 16 pegs	18	457	24	610	4	102	13	5.9
DBW24242	2” drip trough, 20 pegs	24	610	24	610	2	51	16	7.3
DBW24244	4” drip trough, 20 pegs	24	610	24	610	4	102	16	7.3
DBW24302	2” drip trough, 25 pegs	24	610	30	762	2	51	20	9.1
DBW24304	4” drip trough, 25 pegs	24	610	30	762	4	102	20	9.1
DBW24362	2” drip trough, 30 pegs	24	610	36	914	2	51	21	9.5
DBW24364	4” drip trough, 30 pegs	24	610	36	914	4	102	21	9.5
DBW30242	2” drip trough, 32 pegs	30	762	24	610	2	51	19	8.6
DBW30244	4” drip trough, 32 pegs	30	762	24	610	4	102	19	8.6
DBW30302	2” drip trough, 50 pegs	30	762	30	762	2	51	24	10.9
DBW30304	4” drip trough, 50 pegs	30	762	30	762	4	102	24	10.9
DBW30362	2” drip trough, 60 pegs	30	762	36	914	2	51	23	10.4
DBW30364	4” drip trough, 60 pegs	30	762	36	914	4	102	23	10.4
DBW36242	2” drip trough, 40 pegs	36	914	24	610	2	51	21	9.5
DBW36244	4” drip trough, 40 pegs	36	914	24	610	4	102	21	9.5
DBW36302	2” drip trough, 40 pegs	36	914	30	762	2	51	23	10.4
DBW36304	4” drip trough, 40 pegs	36	914	30	762	4	102	23	10.4
DBW36362	2” drip trough, 66 pegs	36	914	36	914	2	51	25	11.3
DBW36364	4” drip trough, 66 pegs	36	914	36	914	4	102	25	11.3

Rev 02/12/18

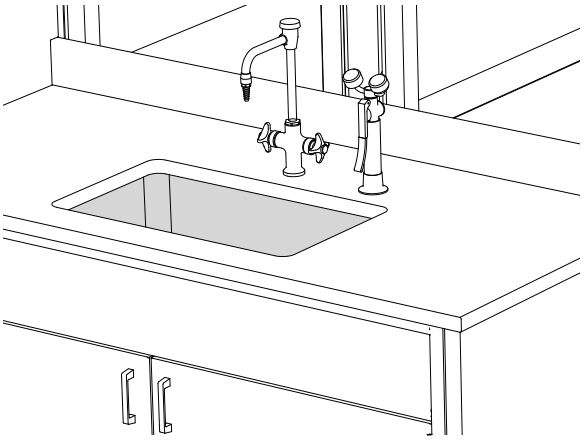

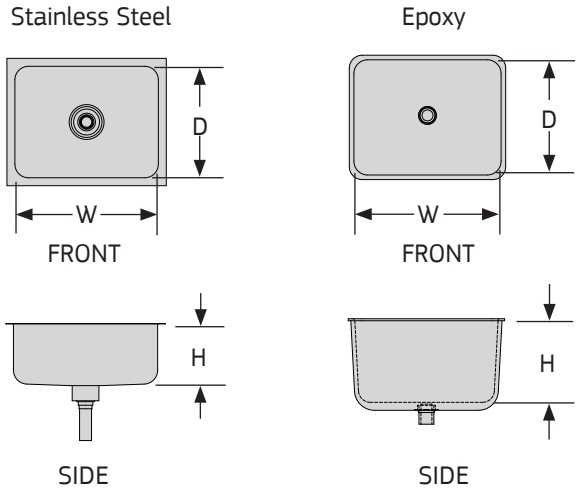

SINK, UNDERMOUNT

- Undermount sinks are installed under a cutout in the surface. Sink supports are required (see below).
- Stainless steel sinks are constructed of 18 gauge, type 304 stainless steel, polished to a #4 finish.
- Stainless steel sinks include stainless steel drain with crumb cup strainer and tailpiece.
- Epoxy sinks are resistant to many acids, solvents and other inert chemicals.
- Epoxy sinks include a sink outlet with strainer plate and integral tailpiece.

NOTES

» Sinks can be paired with Symbiote phenolic and stainless steel worksurfaces. (See Section 4).

» Stainless Steel sinks are certified to ASME A112.19.3.

How to Specify

Step 1. Product Number

LUWS Sink
LUWP Undermount Support

Step 2. Sink Type

E0U Epoxy **S0U** Stainless

Step 3. Depth (Sink only)

14 14" deep **15** 15" deep **16** 16" deep
18 18" deep (stainless only)

Step 4. Width (Sink only)

18 18" wide **20** 20" wide **24** 24" wide
25 25" wide

Step 5. Width (Support Only)

24 24" wide **30** 30" wide **36** 36" wide
48 48" wide **52** 52" wide

Product Number	Description	Overall Dimensions Height in.	[mm]	Width in.	[mm]	Depth in.	[mm]	Bowl Dimensions Height in.	[mm]	Width in.	[mm]	Depth in.	[mm]	Weight lb.	[kg]
LUWSE0U1418F	Epoxy, center drain	11 11/32	288	19	483	15	381	10 ½	267	18	457	14	356	38	17.2
LUWSE0U1525E	Epoxy, corner drain	10 27/32	275	26 ¼	667	16 ¼	413	10	254	25	635	15	381	60	27.2
LUWSS0U1620C	Stainless steel, center drain	7 ⅞	2 0	20 ½	521	16 ½	419	7 ⅞	191	18	457	14	356	11	5.0
LUWSS0U1824C	Stainless steel, center drain	7 ½	191	23 ½	597	18 ¼	464	7 ½	191	21	533	15 ¾	400	14	6.4
LUWP24	Undermount support for 24" w. sink	15 ½	394	23	584									9	4.1
LUWP30	Undermount support for 30" w. sink	15 ½	394	29	737									10	4.5
LUWP36	Undermount support for 36" w. sink	15 ½	394	35	889									12	5.4
LUWP42	Undermount support for 42" w. sink	15 ½	394	41	1041									12	5.4
LUWP48	Undermount support for 48" w. sink	15 ½	394	47	1194									13	5.9
LUWP52	Undermount support for 52" w. sink	15 ½	394	51	1295									14	6.4
LUWP58	Undermount support for 58" w. sink	15 ½	394	57	1448									15	6.8

Rev 06/19/25

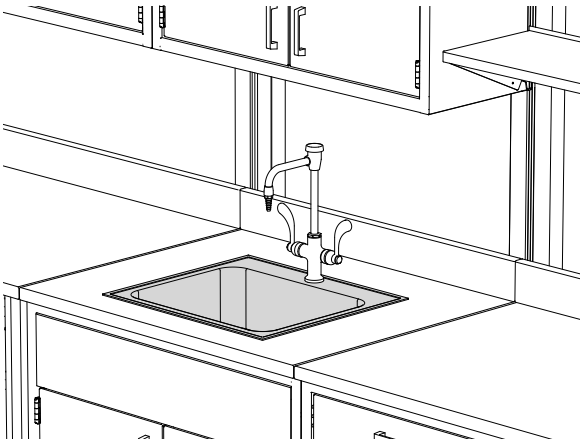

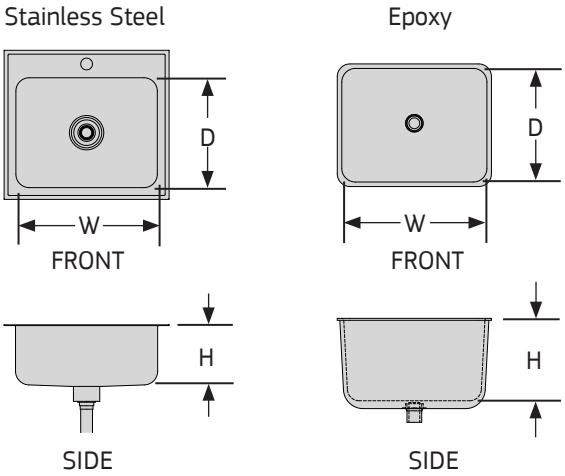

SINK, DROP-IN

- Drop-in sinks are top mounted. This type of installation seals the sink cutout and eliminates worksurface overhang.
- Stainless steel sinks are constructed of 18 gauge, type 304 stainless steel, polished to a #4 finish.
- Stainless steel sinks include stainless steel drain with crumb cup strainer and tailpiece.
- Epoxy sinks are resistant to many acids, solvents and other inert chemicals.
- Epoxy sinks include a sink outlet with strainer plate and integral tailpiece.

NOTES

» Sinks can be paired with Symbiote laminate, phenolic and stainless steel worksurfaces. (See Section 4).

» Stainless Steel sinks are certified to ASME A112.19.3.

How to Specify

Step 1. Product Number

LUWS Sink, Drop-In

Step 2. Sink Type

E Epoxy **S** Stainless

Step 3. Fixture Holes

0D No fixture holes **1D** One fixture hole

Step 4. Depth

14 14" deep **15** 15" deep **19** 19" deep
22 22" deep

Step 5. Width

18 18" wide **21** 21" wide **25** 25" wide

Step 6. Sink Height

C 7½" high **E** 10" high **F** 10½" high

Product Number	Description	Overall Dimensions Height in.	[mm]	Width in.	[mm]	Depth in.	[mm]	Bowl Dimensions Height in.	[mm]	Width in.	[mm]	Depth in.	[mm]	Weight lb.	[kg]
LUWSE0D1418F	Epoxy, center drain, no fixture holes	11 1/2	292	18	457	14	356	10 ½	267	18	457	14	356	30	13.6
LUWSE0D1525E	Epoxy, corner drain, no fixture holes	11	279	25	635	15	381	10	254	25	635	15	381	72	32.7
LUWSS1D1921C	Stainless steel, center drain	7 5/8	194	18	457	14	356	7 5/8	194	18	457	14	356	13	5.9
LUWSS1D2225F	Stainless steel, center drain	10 3/8	264	21	533	15 ¾	400	10 3/8	264	21	533	15 ¾	400	21	9.5

Rev 06/19/25

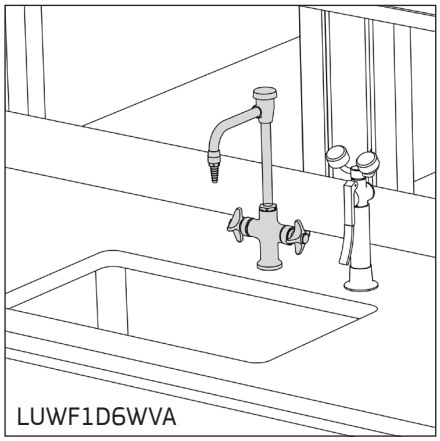
LUWF1D6WVA

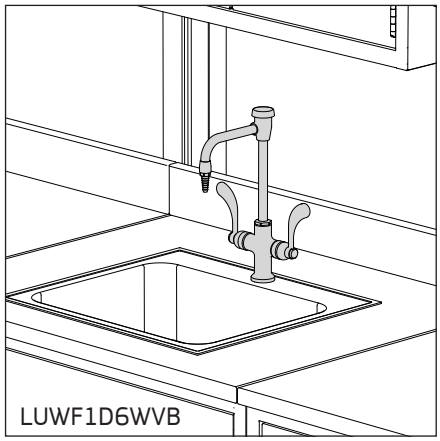
LUWF1D6WVB

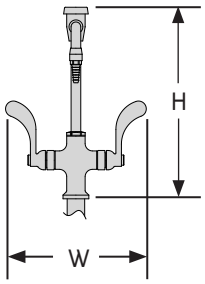

FRONT

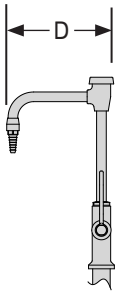

SIDE

SINK FAUCETS, UNDERMOUNT AND DROP-IN

Four-Arm Handle Faucet

- Deck mounted mixing faucet with vacuum breaker for hot and cold water. 6" swing gooseneck.
- Chrome plated forged brass body and four-arm handles with color-coded index discs.
- ⅜" NPS female outlet with removable anti-splash serration hose end.

Blade Handle Faucet

- Deck mounted mixing faucet with vacuum breaker and blade handle(s) for hot and cold water. 6" swing gooseneck.
- Chrome plated forged brass body and blade handle(s) with color-coded index disc(s).
- ⅜" NPS female outlet with removable anti-splash serration hose end.

NOTES

» Fixture is certified by CSA International to comply with ASME A112.18.1M and CSA B125.1.
» Fixture is fully assembled and factory tested prior to shipment.

How to Specify

Step 1. Product Number

LUWF Sink Faucet

Step 2. Type

1D6 Mixing, double handles
1R6 Single, right hand handle

Step 3. Handle

WVA 4-Arm handle
WVB Blade handles

Product Number	Description	Height		Width		Depth		Weight	
		in.	[mm]	in.	[mm]	in.	[mm]	lb.	[kg]
LUWF1D6WVA	Mixing, 4-arm handles	13	330	6 ½	165	7 ⅝	194	5	2.3
LUWF1D6WVB	Mixing, blade handles	13	330	9 ⅝	244	7 ⅝	194	5	2.3
LUWF1R6WVB	Single, blade handle	13	330	5 ⅓	135	7 ⅜	187	4	1.8

Rev 08/05/26

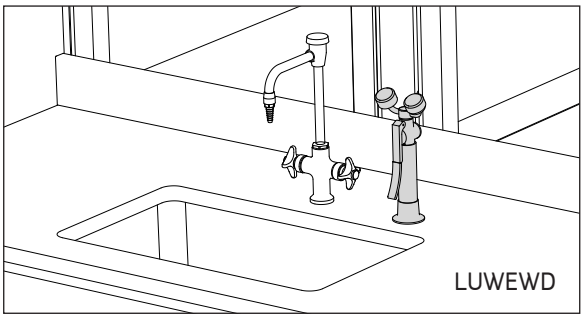

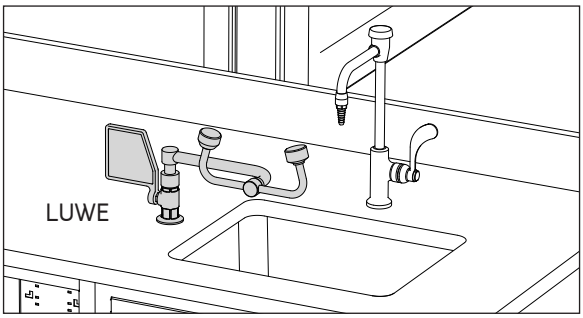

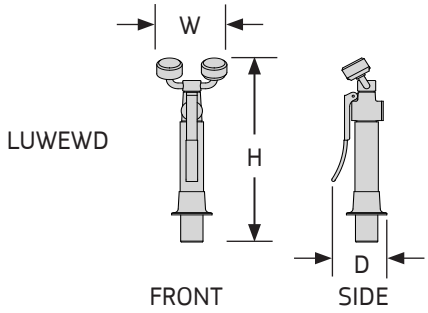

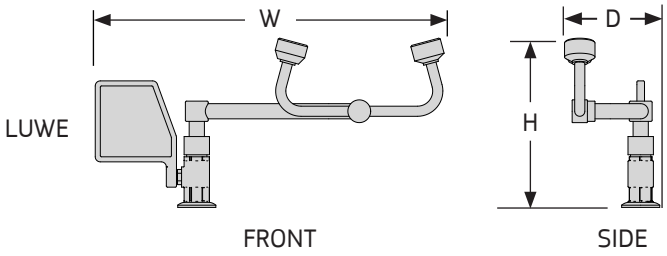

EYEWASH STATIONS

Eyewash/Drench Hose Unit, Deck Mounted

- Dual purpose, eyewash/drench hose assembly can be left as a fixed eye wash or removed to use as a drench hose.
- Two outlet heads with "flip-top" dust covers are mounted on chrome plated brass supply arms.
- Locking clip engages when handle is depressed. Valve stays open until locking clip is released.
- Includes an 8' reinforced PVC hose. 275 PSI hose rating. Unit is completely assembled and water tested prior to shipment.

Swing Activated Eyewash Unit, Deck Mounted

- Eyewash unit is deck mounted on counter next to sink. Spray heads swivel 90° from storage to operational position.
- Includes twin spray heads with protective covers and a large push handle. Water flow is activated by flag handle; specify LH or RH.
- Unit is chrome plated brass and ships completely assembled.

How to Specify

Step 1. Product Number

LUWEW Eyewash Station

Step 2. Mount Type

D Drench
L Left hand, swing style
R Right hand, swing style

NOTES

» Eyewash stations can be easily mounted next to the sink for maximum accessibility.
» Eyewashes meet the provisions of ANSI Z358.1-2014.

Product Number	Description	Height		Width		Depth		Weight	
		in.	[mm]	in.	[mm]	in.	[mm]	lb.	[kg]
LUWEWD	Drench unit	10 ⅛	257	4 ⅛	105	3 ¼	83	5	2.3
LUWEWL	Left-hand swing style	8 ⅜	213	17 ⅛	435	4 ⅝	117	4	1.8
LUWEWR	Right-hand swing style	8 ⅜	213	17 ⅛	435	4 ⅝	117	4	1.8

Rev 08/05/26

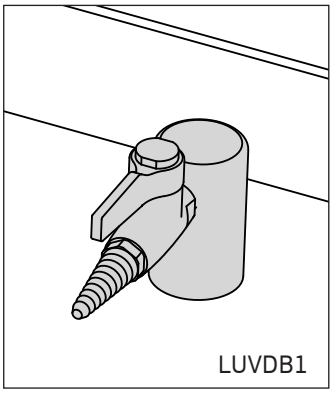
LUVDB1

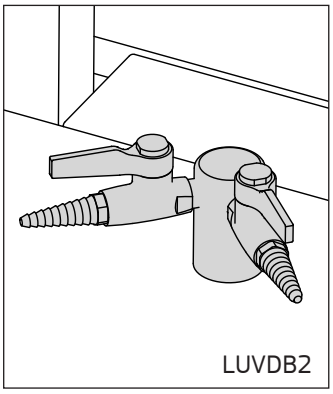
LUVDB2

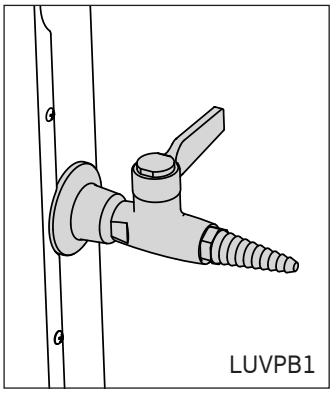
LUVPB1

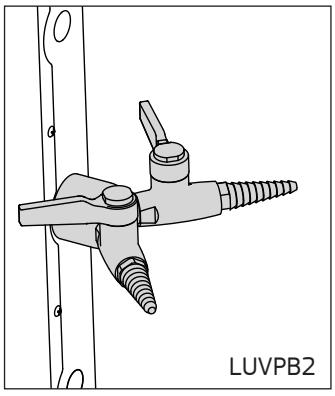
LUVPB2

BALL VALVES

Ball Valves

- Single or double ball valves offer on/off control of lab gasses at pressures up to 75 psi.
- Fixtures have a forged brass valve body and lever handle with chrome-plated brass ball and molded PTFE seals.
- Valves have a ⅜" NPT male inlet with ⅜" IPS mounting shank, washer and locknut.
- ⅜" NPT female outlet includes removable ten serration hose end and color-coded index disc on the quarter turn lever handle.
- Finish is polished chrome plating.

Hoses

- Hose assemblies have a ⅜" NPT male connector on each end, include a ⅜" NPT female elbow connector and are rated for 300 psi maximum working pressure.
- PVC style hoses have a ⅝" O.D. reinforced PVC hose with nylon braid and ⅜" I.D. PVC inner core.
- Stainless steel hoses have a stainless steel overbraid with PTFE inner core.
- Hose length specified in inches (096 and 120 are standard lengths).

NOTES

» Fixture certified by CSA International to comply with ASME A112.18.1M and CSA B125.1.

» Fixture is fully assembled and factory tested prior to shipment.

How to Specify

Step 1. Product Number

LUVDB	Ball Valve, deck-mount
LUVPB	Ball Valve, panel-mount
LUVHP	PVC Hose
LUVHS	Stainless Steel Hose

Step 2a. Valve Type (Valves)

1	Single	**2**	Double

Step 2b. Hose Length (Hoses)

096	96" length	**120**	120" length

Step 3a. Index Disc Cap (Valves)

AIR	Air	**GAS**	Gas
NIT	Nitrogen	**VAC**	Vacuum

Step 3b. Hose Color (Hoses)

BLU	Blue	**BRN**	Brown
ORG	Orange	**YEL**	Yellow

Product Number	Description	Length		Width		Depth		Weight	
		in.	[mm]	in.	[mm]	in.	[mm]	lb.	[kg]
LUVDB1	Deck-mount, single valve							1	0.5
LUVDB2	Deck-mount, double valve							2	0.9
LUVPB1	Panel-mount, single valve							1	0.5
LUVPB2	Panel-mount, double valve							1	0.5
LUVHP096	PVC hose	96	2438					2	0.9
LUVHP120	PVC hose	120	3048					2	0.9
LUVHS096	Stainless steel overbraid hose	96	2438					2	0.9
LUVHS120	Stainless steel overbraid hose	120	3048					2	0.9

Rev 06/03/19

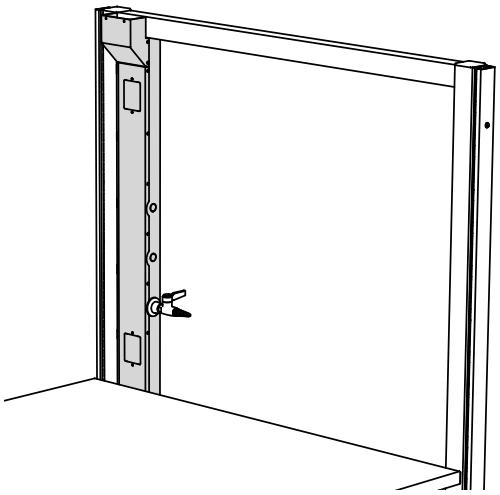

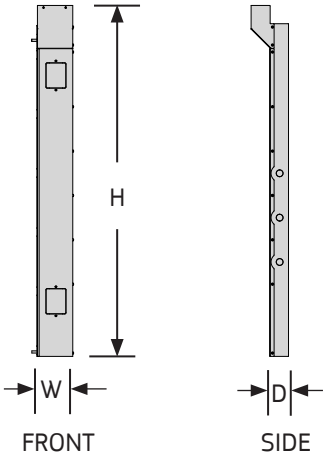

VERTICAL UTILITY CHASE, ERGOSTAT RISER FRAME

- Vertical utility chase offers utility flexibility in the lab without compromising the height adjustability.
- A total of three utility control/outlet knockouts are placed within easy reach on the vertical chase.
- Standard wall faceplate knockouts are provided at the top and bottom of the front of the Vertical Utility chase.
- Top access router included with each vertical utility chase.
- Vertical utility chase housing divider allows for separation of utilities within the chase.

NOTES

» Housing dividers sold separately.
» Data jack ports and faceplates not included.
» 43" Vertical Utility Chase Housings can only be mounted on ErgoStat Riser Frames.

How to Specify

Step 1. Product Number

VUCH Vertical Utility Chase Housing
VUCHD Vertical Utility Chase Divider

Step 2. Height

43 43" high

Step 2. Mount Location (Chase Housing only)

L Left-Hand **R** Right-Hand

Product Number	Description	Height		Width		Depth		Weight	
		in.	[mm]	in.	[mm]	in.	[mm]	lb.	[kg]
VUCH43L	Housing, left-hand	39 ½	1003	4	102	2 ⅛	54	7	3.2
VUCH43R	Housing, right-hand	39 ½	1003	4	102	2 ⅛	54	7	3.2
VUCHD43	Housing divider	39 ½	1003	1 ⅛	29	2	51	2	0.9

Rev 05/31/18

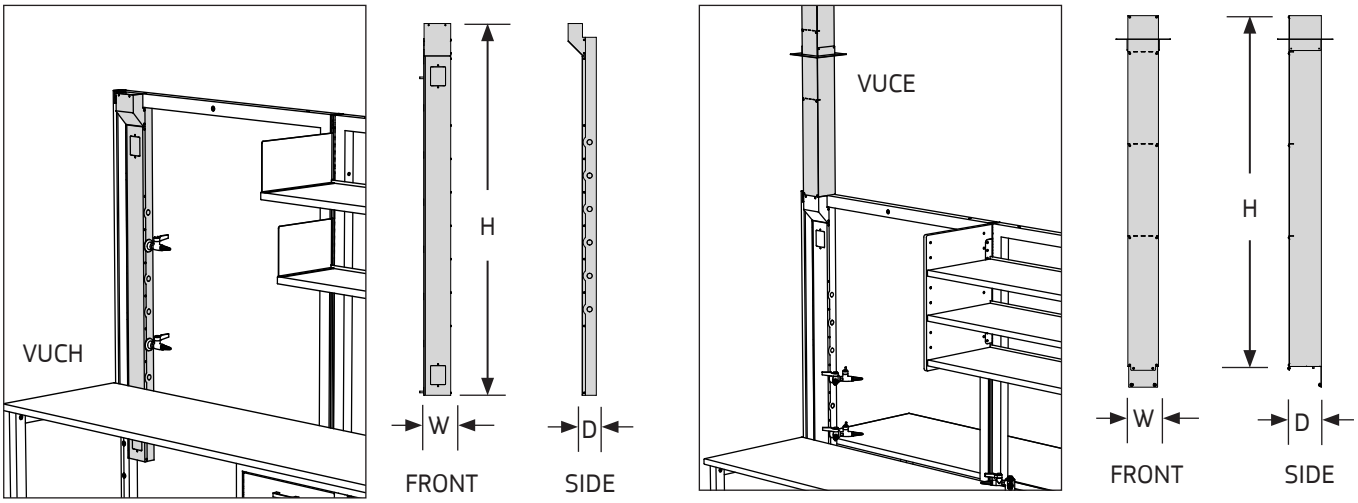

VERTICAL UTILITY CHASE, ULTRAFRAME

- Vertical utility chase offers utility flexibility in the lab without compromising the height adjustability of work surfaces on benches.
- A total of six utility control/outlet knockouts are placed within easy reach on the vertical chase.
- Standard wall faceplate knockouts are provided at the top and bottom of the front and back sides of the Vertical Utility chase.
- Top access router included with each vertical utility chase.
- Extender conceals utilities routed from the ceiling to the top of the UltraFrame and can be trimmed on site as needed for ceilings up to 10'6" H.
- Extender and housing dividers allow for separation of utilities within the chase and can be trimmed in the field as needed.

NOTES

» Housing dividers and extenders sold separately.
» Data jack ports and faceplates not included.
» Color matched ceiling trim plate included with extender.
» 80" Vertical Utility Chase Housings and Extenders only mount on 80" high UltraFrames.

How to Specify

Step 1. Product Number

VUCH80	Utility Chase Housing
VUCHD80	Housing Divider
VUCE46	Extender
VUCED46	Extender Divider

Step 2. Handed (Housing only)

L Left-Hand **R** Right-Hand

Product Number	Description	Height		Width		Depth		Weight	
		in.	[mm]	in.	[mm]	in.	[mm]	lb.	[kg]
VUCH80L	Housing, left-hand	55 ⅝	1413	4	102	2 ⅛	54	10	4.5
VUCH80R	Housing, right-hand	55 ⅝	1413	4	102	2 ⅛	54	10	4.5
VUCHD80	Housing divider	55 ⅝	1413	1 ⅛	29	2	51	3	1.4
VUCE46	Extender	45 ¾	1162	4	102	4 ¼	108	11	5.0
VUCED46	Extender divider	45 ¾	1162	1 ⅛	29	4	102	3	1.4

Rev 05/30/18

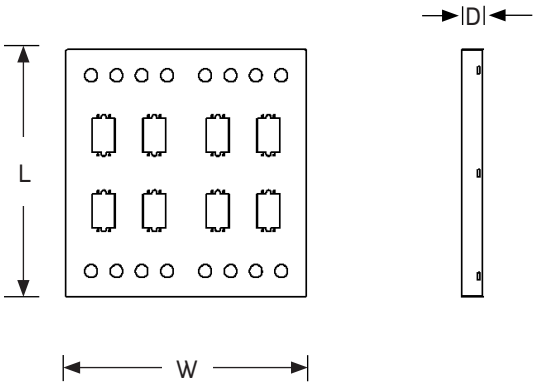

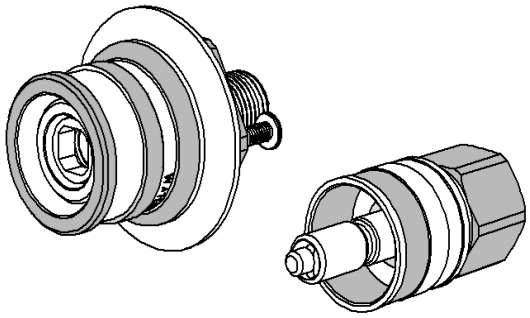

BODY PLUG

CEILING SERVICE PANEL, QUICK CONNECTS

Ceiling Service Panel

- Ceiling Service Panels are designed to fit in standard 2' x 2' ceiling grid openings.
- Made with 16 guage sheet metal, ceiling service panels have (16) quick connect knockouts and (8) single electrical and/or data knockouts.

Quick Connect Fittings

- Quick Connect bodies and plugs are finished with polished chrome plated brass.
- Internal quick connect valve components are stainless steel to assure compatibilitiy with the service and to assure durable performance.
- Quick Connect Plugs have an internal shut-off valve that closes when the valve is disengaged.

Cover Plates

- Cover Plates are stainless steel.

How to Specify

Step 1. Product Number

CSVP2424	**QCD-P-⅜F-ORG**
CPSHSS	**QCD-B-⅜M-ORG**
CPSBSS	**QCS-P-⅜F-YLW**
CPS3DSS	**QCD-B-⅜M-YLW**

Step 2. Paint Color Code (CSVP2424 only)

AW Arctic White
BK Black
GL Grey Light
NW Neutral White

Product Number	Description	Length		Width		Depth		Weight	
		in.	[mm]	in.	[mm]	in.	[mm]	lb.	[kg]
CSVP2424	Ceiling Service Panel	23.75	10.77	23.75	10.77	2	0.90	13	5.89
QCD-P-⅜F-ORG	Quick connect plug, ⅜ female							½	0.22
QCD-B-⅜M-ORG	Quick connect body, ⅜ male							½	0.22
QCS-P-⅜F-YLW	Quick connect plug, ⅜ female							½	0.22
QCD-B-⅜M-YLW	Quick connect body, ⅜ male							½	0.22
CPSHSS	Cover plate, single gang, 1.6" dia. hole							¼	0.11
CPS3DSS	Cover plate, single gang, 3 data port openings							¼	0.11
CPSBSS	Cover plate, single gang, blank							¼	0.11

Rev 10/29/21

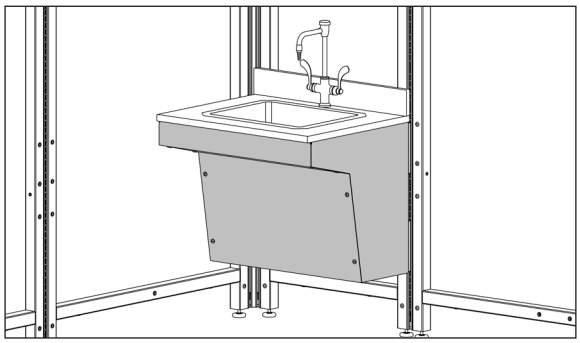

Frame-mounted

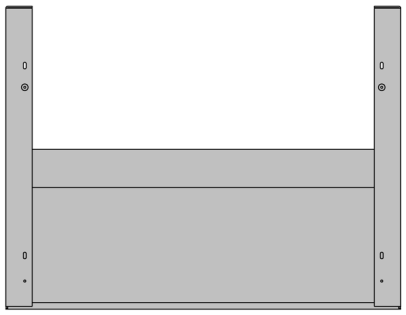

TOP

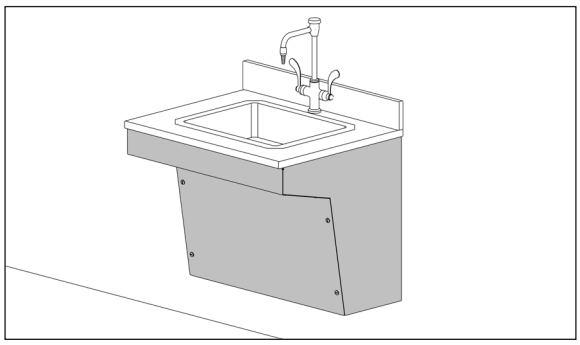

Wall-mounted

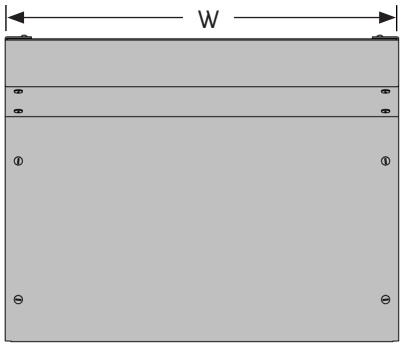

FRONT

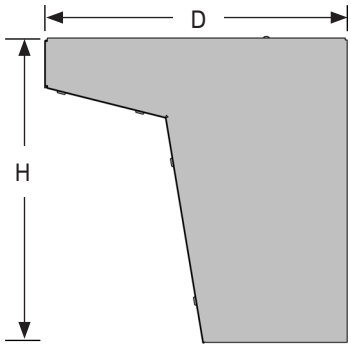

SIDE

ADA SINK SHROUD

- Designed to meet ADA requirements, sink shrouds offer a sleek and elegant look while concealing unsightly plumbing hoses and drains.
- The front face of the sink shroud is easily removable for easy access to plumbing lines.
- Sink shrouds are epoxy powder coated to prevent corrosion.
- Four-piece construction made from 11 ga. and 16 ga. steel.

NOTES

» Wall-mounted ADA sink shroud does not include wall fasteners. Wall-mounted sink shroud fasteners to be supplied by customer and field installed.

» Shipped knocked down.

How to Specify

Step 1. Product Number

SSMFA Frame-mounted
SSMWA Wall-mounted

Step 2. Depth

23 23" deep

Step 3. Width

24 24" wide
30 30" wide
36 36" wide
48 48" wide

Step 4. Paint Color Code

AW Arctic White
AS Argent Silver
BK Black
BT Black Texture
GL Grey Light Smooth
GT Grey Light Texture
NW Neutral White
ST Sand Texture

Product Number	Description	Height		Width		Depth		Weight	
		in.	[mm]	in.	[mm]	in.	[mm]	lb.	[kg]
SSMFA2424	ADA sink shroud, Frame-mount	23	584	23 7/8	606	23	584	43	19
SSMFA2430	ADA sink shroud, Frame-mount	23	584	29 7/8	759	23	584	46	21
SSMFA2436	ADA sink shroud, Frame-mount	23	584	35 7/8	911	23	584	48	22
SSMFA2448	ADA sink shroud, Frame-mount	23	584	47 7/8	1216	23	584	55	25
SSMWA2424	ADA sink shroud, Wall-mount	23	584	23 7/8	606	23	584	41	19
SSMWA2430	ADA sink shroud, Wall-mount	23	584	29 7/8	759	23	584	45	20
SSMWA2436	ADA sink shroud, Wall-mount	23	584	35 7/8	911	23	584	46	21
SSMWA2448	ADA sink shroud, Wall-mount	23	584	47 7/8	1216	23	584	53	24

Rev 06/05/26

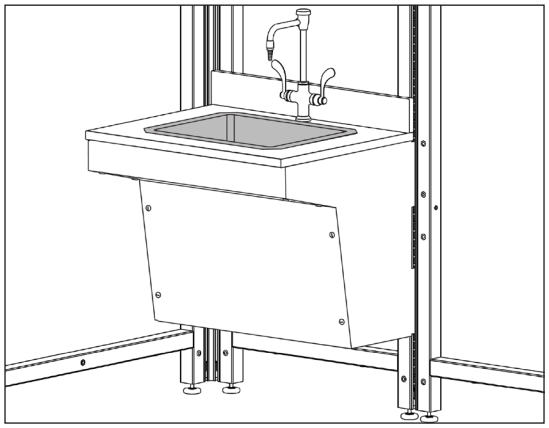

Drop-in sink

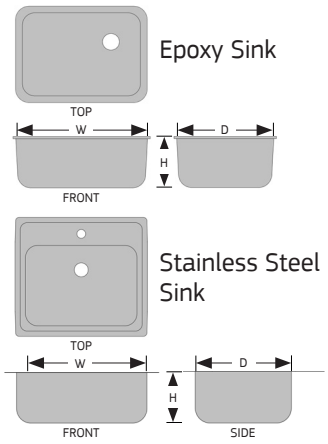

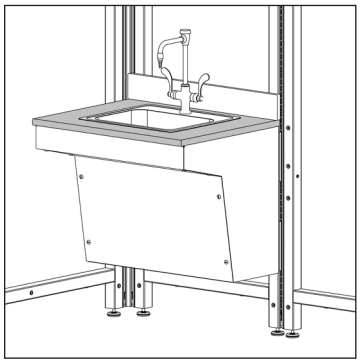

Phenolic Surface

ADA SHROUD SINKS AND SURFACES

- Drop-in sinks are top mounted. This type of installation seals the sink cutout and eliminates worksurface overhang.
- Stainless steel sinks are constructed of 20 gauge, type 304 stainless, polished to a #4 finish.
- Epoxy sinks are resistant to many acids, solvents and other inert chemicals.
- Stainless steel sinks include stainless drain with crumb cub strainer and tailpiece.
- Epoxy Sinks include sink outlet with strainer plate and tailpiece.
- 1" thick Phenolic Surfaces have centered cut-outs for the corresponding Stainless Steel and Epoxy drop-in sinks, color is Black (BK).

NOTES

» Stainless steel sinks are certified to ASME A112.19.3/CSAB45.4 and complies with ADA & ICC A117.1.
» Sinks can be paired with ADA Sink Shroud Phenolic work surfaces.
» Can be used with Phenolic Backsplashes, sold separately, see page 4.31.
» Phenolic Surfaces for Epoxy Drop-in sinks have a single, centered faucet fixture hole opening..

How to Specify

Step 1. Product Number (Sink or Surface)

LUWS Sink, Drop-in
TSPADA Phenolic Surface

Step 2. Sink Type (Sink only)

E Epoxy **S** Stainless Steel

Step 3. Fixture Holes (Sink only)

OD No fixture holes (Epoxy) **ID** One fixture hole (Stainless)

Step 4. Depth (Sink or Surface)

10 10" deep (Sink) **17** 17" deep (Sink)
24 24" deep (Surface)

Step 5. Width (Sink or Surface)

14 14" Wide (Sink) **19** 19" Wide (Sink)
24 24" Wide (Surface) **30** 30" Wide (Surface)
36 36" Wide (Surface) **48** 48" Wide (Surface)

Step 6. Sink Height (Sink only)

G 5" high

Step 7. Phenolic Surface, Drop-In (Surface only)

EPDP Epoxy Sink **SSDP** Stainless Steel Sink

Step 8. Color Code (Surface only)

BK Black

Product Number	Description	Height		Width		Depth		Weight	
		in.	[mm]	in.	[mm]	in.	[mm]	lb.	[kg]
LUWSEOD1014G	Epoxy Drop-in	6	152	14	356	10	254	22	10
LUWSS1D1719G	Stainless Steel Drop-in	6 ⅛	156	16	406	11 ½	292	6 ½	3
TSPADA2424EPDPBK	Phenolic Surf, Epoxy sink cut-out	1	25	24	610	24	610	29	13
TSPADA2430EPDPBK	Phenolic Surf, Epoxy sink cut-out	1	25	30	762	24	610	36	16
TSPADA2436EPDPBK	Phenolic Surf, Epoxy sink cut-out	1	25	36	914	24	610	43	20
TSPADA2448EPDPBK	Phenolic Surf, Epoxy sink cut-out	1	25	48	1219	24	610	58	26
TSPADA2424SSDPBK	Phenolic Surf, SS sink cut-out	1	25	24	610	24	610	29	13
TSPADA2430SSDPBK	Phenolic Surf, SS sink cut-out	1	25	30	762	24	610	36	16
TSPADA2436SSDPBK	Phenolic Surf, SS sink cut-out	1	25	36	914	24	610	43	20
TSPADA2448SSDPBK	Phenolic Surf, SS sink cut-out	1	25	48	1219	24	610	58	26

Rev 07/16/26

COMPUTER SUPPORT

Keyboard and Mouse Tray, Surface-Mount 11.2
CPU Holder. 11.3
Accessory Mounting Brackets. 11.4
Monitor Arms, Bolt/Clamp Mount. 11.5
Monitor Arms, Add-On Post 11.6
Monitors Arms, End/Center/Saddle Mount 11.7
Slatwall Rail and Monitor Arm 11.8
Arm Mount Platform and Notebook Holder 11.9

11

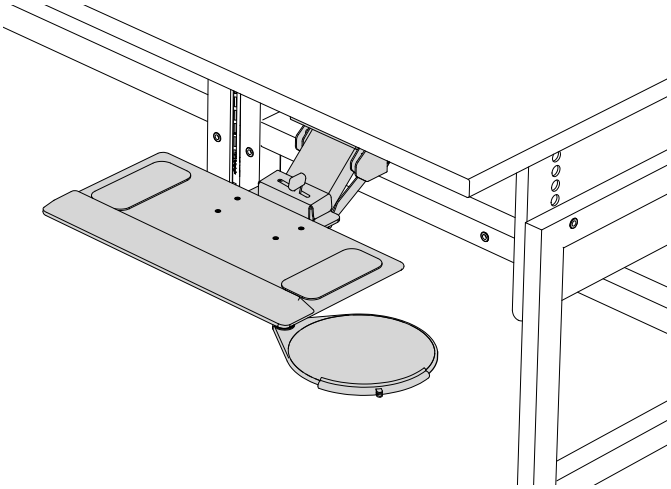

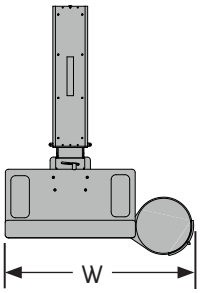

TOP

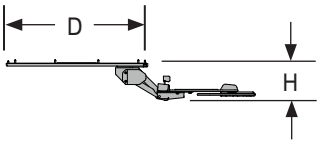

SIDE

KEYBOARD AND MOUSE TRAY, SURFACE-MOUNT

- Keyboard Trays provide storage for keyboards beneath surfaces.
- 10⅝" deep by 20⅛" wide keyboard platform includes a black non-skid pad and a removable foam wrist rest that leaves 8" of useable tray depth when in place.
- Trays feature 4¼" of spring assisted vertical travel and have a tilt adjustment range of 0 to -10°.
- Trays swivel 360° and feature sliding tracks that provide a 16" travel range allowing trays to retract under surfaces. In the forward most position, the front of the Keyboard Tray extends 14" from the front of the surface.
- Keyboard mechanisms adjust in height with a simple one-handed motion without the use of locks, levers or knobs. Unique angle adjustment levers allow users to simply adjust the angle by sliding the lever from left to right.
- A 9" diameter round Mouse Tray is included with each Keyboard Tray. Mouse Trays can be mounted on the left or right side of Keyboard Trays and swivel 360° to hide under the trays when not used with a mouse.
- Mouse Trays include a black non-skid pad and moveable stopper to protect the mouse from falling off the tray.
- Load capacity 25 lbs.
- Finish is Black.

NOTES

» Cannot be mounted on a 24" or 30" surface of a Table, WorkTable, or ErgoStat.

How to Specify

Step 1. Product Number

KTAMBK

Product Number	Description	Height		Width		Depth		Weight	
		in.	[mm]	in.	[mm]	in.	[mm]	lb.	[kg]
KTAMBK	Keyboard and mouse tray	4 ¾	121	29 ½	749	21 ¾	552	15	7

Rev 03/20/12

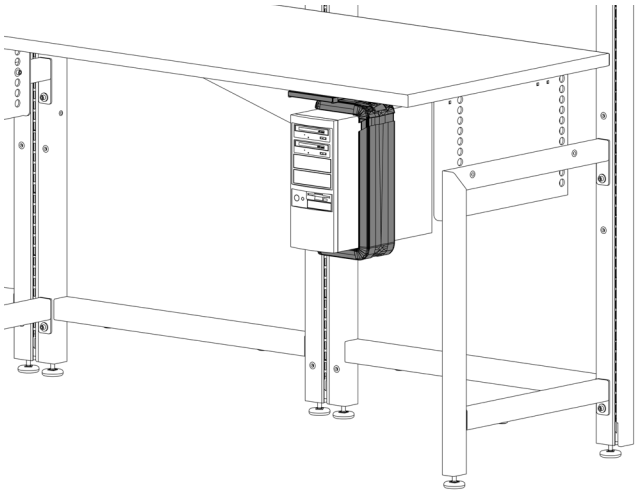

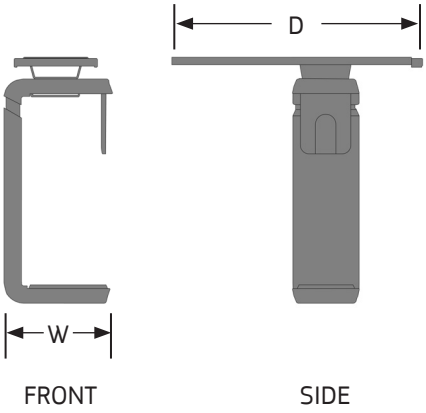

CPU HOLDER

- CPU Holder provides vertical storage of computers below surfaces.
- Holder features a sliding track which allows the unit to retract 9" from the front of the track and extend 4" from the front of the track.
- Fits CPUs 3.5"-9" wide, 12"-20" tall.
- Units swivel 360° for easy access.
- Load capacity 50 lbs.
- Finish is Black and Brushed Aluminum.

How to Specify

Step 1. Product Number

CPUBBK

Product Number	Description	Height		Width		Depth		Weight	
		in.	[mm]	in.	[mm]	in.	[mm]	lb.	[kg]
CPUBBK	CPU holder	16.5 - 24	419-610	7⅛ - 10½	181-267	16	406	7	3.2

Rev 09/02/26

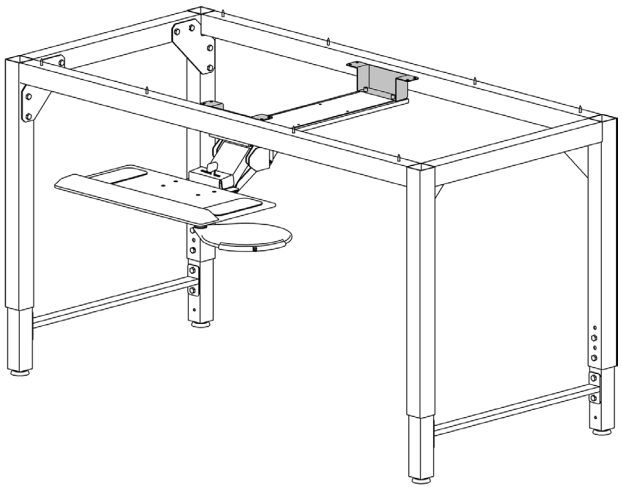

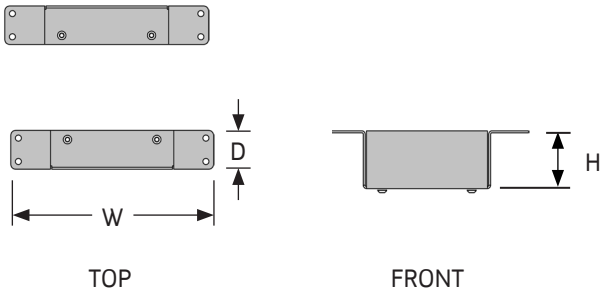

ACCESSORY MOUNTING BRACKETS

- Accessory Mounting Brackets suspend a CPU Holder or Keyboard and Mouse Tray from the underside of a 4-Legged Table.
- Brackets mount to the bottom of the surface with screws provided in the computer accessory kit.
- Load capacity 75 lbs.
- Finish is black.

NOTES

» Works with Keyboard and Mouse Trays on 30" and 36" deep tables (not 24" depth). Sold Separately; see page 11.2.

» Compatible with CPU Holders on all table depths. Sold separately; see page 11.3.

How to Specify

Step 1. Product Number

ACMBBK

Product Number	Description	Height		Width		Depth		Weight	
		in.	[mm]	in.	[mm]	in.	[mm]	lb.	[kg]
ACMBBK	Accessory brackets	2 ⅜	60	8 ½	216	1 ½	38	2	1

Rev 08/19/14

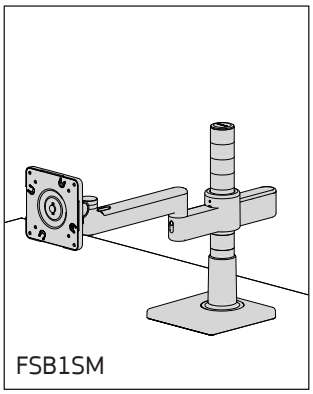
FSB1SM

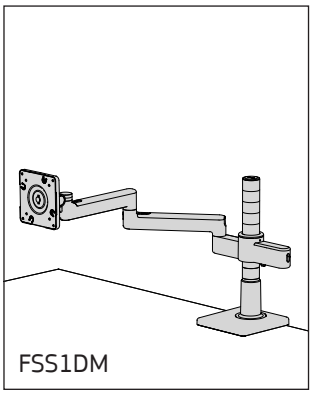
FSS1DM

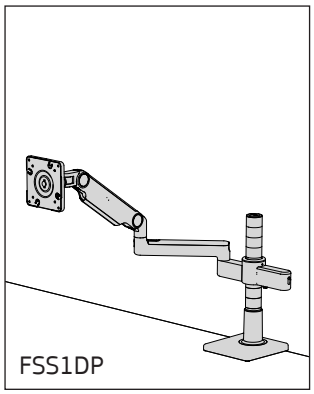
FSS1DP

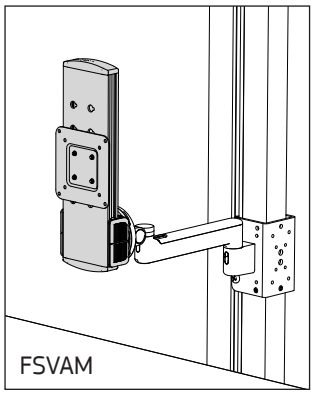
FSVAM

MONITOR ARMS, BOLT/CLAMP MOUNT

Monitor Arms for Surfaces

- Arms include both 75mm and 100mm VESA mounting brackets and support monitors/accessories up to 15 lbs.
- Arms provide a 360° view in portrait or landscape, with built-in cable management.
- Bolt Mount (FSB1) bolts through a ½" to 3" diameter hole in surfaces up to 1½" thick.
- Clamp Mount (FSS1) clamps to a surface edge ½" - 2¾" thick.

Spring Adjustable Monitor Arm

- Arms include both 75mm and 100mm VESA mounting brackets and supports monitors/accessories up to 15 lbs.
- Arms provide a 360° view in portrait or landscape, with a 10½" height adjustment range.
- Clamps to surfaces ½" - 2¾" thick.

Vertical Adjustment Mechanism (FSVAMBK)

- Front adjustment mechanism can be added to any arm to provide 9" of vertical adjustment without manual repositioning on post; for monitors up to 15 lbs.
- Finish is silver with black trim.

NOTES

» Additional multiple monitor combinations available upon request; consult factory.

How to Specify

Step 1. Product Number

FSB1 Monitor Arm, bolt, 1 monitor
FSS1 Monitor Arm, clamp, 1 monitor
FSVAM Vertical Adjustment Mechanism

Step 2. Arm

SM Single Arm
DM Double Arm
DP Spring Adjustable Double Arm *(Clamp only)*

Step 3. Finish Color Code

BK Black
SG Silver with Grey Trim
WA Polished Aluminum with White Trim

Product Number	Description	Height		Depth		Weight	
		in.	[mm]	in.	[mm]	lb.	[kg]
FSB1SM	Bolt mount, 1 monitor, single arm	13 ¾	349	6 ½-14 ½	165-368	12	5
FSB1DM	Bolt mount, 1 monitor, double arm	13 ¾	349	8 ½-20	203-508	13	6
FSS1SM	Clamp mount, 1 monitor, single arm	13 ¾	349	6 ½-14 ½	165-368	12	5
FSS1DM	Clamp mount, 1 monitor, double arm	13 ¾	349	8 ½-20	203-508	13	6
FSS1DP	Spring adjustable, 1 monitor, double arm	13 ¾-22.5	349-572	26	660	14	6
FSVAMBK	Vertical adjustment mechanism, arm mount	13 ¾	349	1 ⅝	41	4	2

Rev 1/19/21

FSP1SM

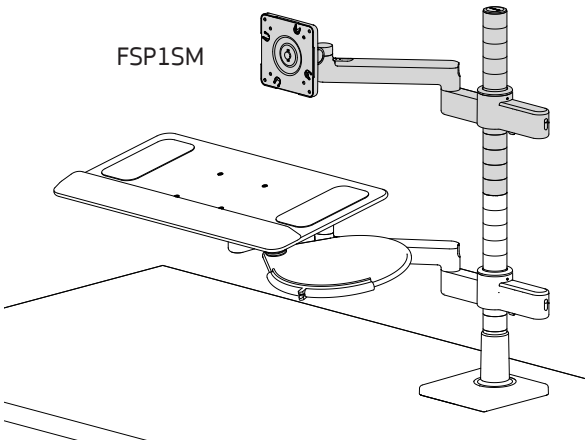

FSL1DM

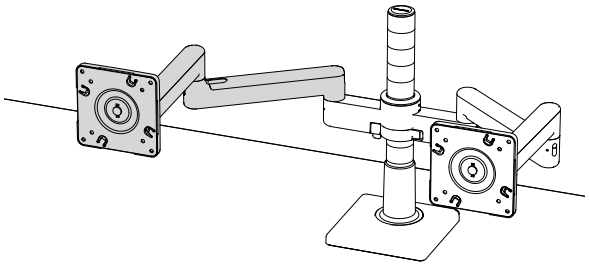

MONITOR ARMS, ADD-ON POST

- Add-on Post with articulating monitor arm adds a second tier to monitor arm posts.
- The extension arm extends in or out and can be rotated up to 360 degrees. Height is adjustable along the length of the post-mounted base.
- Can be used in conjunction with a separate keyboard or notebook holder.
- Arm supports monitors/accessories up to 15 lbs.
- Must order surface bolt or clamp mount arm separately; see page 11.6.

How to Specify

Step 1. Product Number

FSP1 Monitor Arm, Add-on Post
FSL1 Monitor Arm Set, Add-on

Step 2. Arm

NM No Arm
SM Single Arm
DM Double Arm
DP Spring Adjustable Double Arm *(FSP1 only)*

Step 3. Finish Color Code

BK Black
SG Silver with Grey Trim
WA Polished Aluminum with White Trim

Product Number	Description	Height		Depth		Weight	
		in.	[mm]	in.	[mm]	lb.	[kg]
FSP1NM	Monitor add-on post 12" H, no arm	13	330	3 ¾	95	10	5
FSP1SM	Monitor add-on post 12" H, 1 arm, 1 monitor	13	330	11 ½	292	12	5
FSP1DM	Monitor add-on post 12" H, 2 arms, 1 monitor each	13	330	19 ¼	489	13	6
FSL1SM	Arm set, single, 8" straight arm, 1 monitor each	5 ¼	133	11 ½	292	7	3
FSL1DM	Arm set, double, 8" straight arms, 1 monitor each	7 ¼	184	19 ¼	489	10	5
FSL1DP	Arm set, single, 8" straight arm, single dynamic arm, 1 monitor each	13 ¾	349	26	660	14	6

Rev 1/1/19

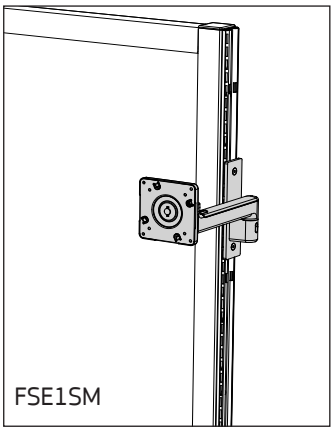
FSE1SM

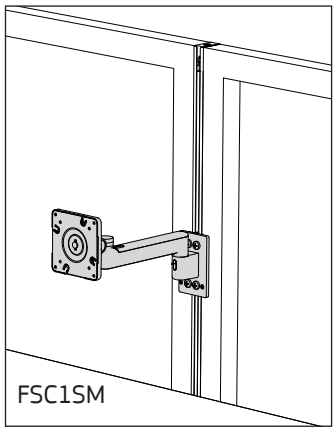
FSC1SM

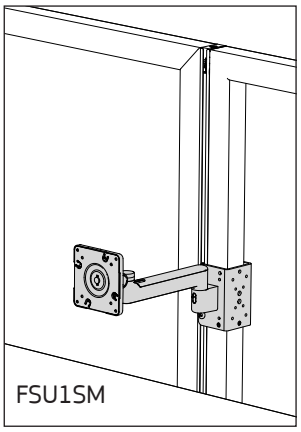
FSU1SM

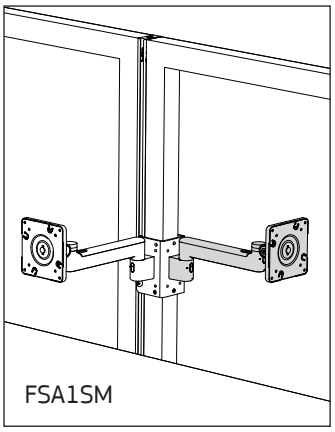
FSA1SM

MONITORS ARMS, END/CENTER/SADDLE MOUNT

- Arms include both 75mm and 100mm VESA mounting brackets and support monitors/accessories weighing up to 15 lbs.
- Arms provide a 360° view in portrait or landscape, with built-in cable management.
- Center Mount style (FSC1) attaches at a frame joint and adjusts vertically in 1" increments.
- End Mount style (FSE1) attaches to the end of a Riser Frame and adjusts in 6" increments.
- Saddle Mount style (FSU1) straddles the vertical tube of an UltraFrame, Riser Frame or Connector Post and adjusts in 1" increments. The saddle bracket allows flat screen/accessory mounting on the front, inside or back of the frame.
- Add-on Arms (FSA1xM) attach to the front, inside or back mounting positions on an FSU1. Up to two sets of Add-on arms can be attached to the Saddle Mount bracket for a total capacity of 3 arms on an FSU1, one in each position.
- Finish is black.

How to Specify

Step 1. Product Number

FSE1	Monitor Arm, End Mount, 1 monitor
FSC1	Monitor Arm, Center Mount, 1 monitor
FSU1	Monitor Arm, Saddle Mount, 1 monitor
FSA1	Add-on Arm

Step 2. Arm Type

SM Single arm **DM** Double arm

NOTES

» Additional multiple monitor combinations available upon request; consult factory.
» A Vertical Adjustment Mechanism can be added to any arm to provide 9" of vertical adjustment without manual repositioning of the clip-mounted bases. Sold separately; see page 11.6.
» FSU1 does not attach to Riser Spines, but can be mounted on UltraFrame Spines.
» End Covers cannot be used on the end of a Riser Frame when a FSE1 is attached.

Product Number	Description	Height		Depth		Weight	
		in.	[mm]	in.	[mm]	lb.	[kg]
FSE1SMBK	End mount, 1 monitor, single arm	7 ¾	197	11 ½	292	12	5
FSE1DMBK	End mount, 1 monitor, double arm	7 ¾	197	19 ¼	489	13	6
FSC1SMBK	Center mount, 1 monitor, single arm	5 ¼	133	11 ½	292	12	5
FSC1DMBK	Center mount, 1 monitor, double arm	7 ¼	184	19 ¼	489	13	6
FSU1SMBK	Saddle mount, 1 monitor, single arm	5 ¼	133	11 ½	292	12	5
FSU1DMBK	Saddle mount, 1 monitor, double arm	7 ¼	184	19 ¼	489	13	6
FSA1SMBK	Add-on arm, 1 monitor, single arm	5 ¼	133	11 ½	292	10	5
FSA1DMBK	Add-on arm, 1 monitor, double arm	7 ¼	184	19 ¼	489	11	5

Rev 01/06/21

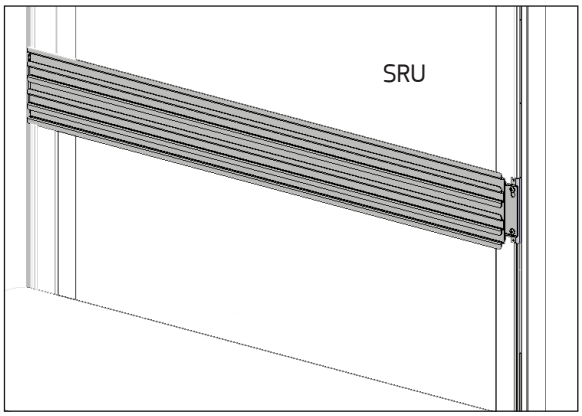

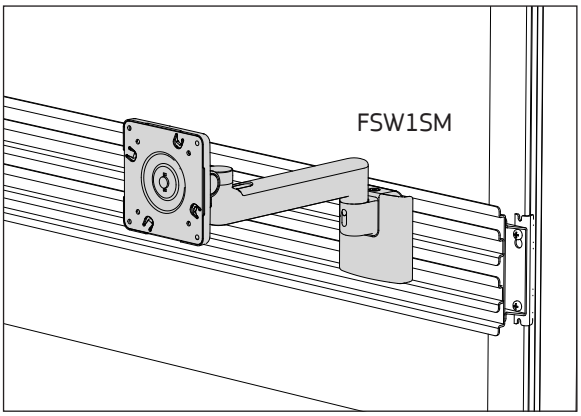

SLATWALL RAIL AND MONITOR ARM

Slatwall Rail

- Provides mounting of slatwall-mounted arms and industry standard slatwall components with horizontal adjustment.
- 3" center-to-center mounting.
- Two mounting locations offering 3" of vertical adjustment on rail.
- Horizontal rails allow for mounting of standard hang-on style plastic parts bins.

Monitor Arm, Slatwall Mount

- Arms include both 75mm and 100mm VESA mounting brackets and support monitors/accessories up to 15 lbs.
- Arms provide a 360° view in portrait or landscape, with built-in cable management.

NOTES

» For mounting Slatwall Rail on UltraFrame System, order Rail to fit appropriate frame size; see below.

» A Vertical Adjustment Mechanism can be added to any arm to provide 9" of vertical adjustment without manual repositioning of the clip-mounted bases; see page 11.6.

How to Specify

Step 1. Product Number

SRU Slatwall Rail
FSW1 Monitor Arm, Slatwall Mount

Step 2a. Width (Slatwall Rail only)

24 24" width **30** 30" width **36** 36" width
48 48" width **60** 60" width

Step 2b. Arm (Monitor Arms only)

SM Single Arm **NM** No Arm
DM Double Arm

Step 3a. Paint Color (Slatwall Rail only)

AW Arctic White **GL** Grey Light Smooth
AS Argent Silver **GT** Grey Light Texture
BK Black **NW** Neutral White
BT Black Texture **ST** Sand Texture

Step 3b. Finish Color (Monitors Arms only)

BK Black
SG Silver with Grey Trim
WA Polished Aluminum with Trim

Product Number	Description	Height		Width		Depth		Weight	
		in.	[mm]	in.	[mm]	in.	[mm]	lb.	[kg]
FSW1SM	Monitor arm, slatwall, 1 monitor, single arm	4 ¼	108			11 ½	292	8	4
FSW1DM	Monitor arm, slatwall, 1 monitor, double arm	6 ¼	159			19 ¼	489	10	5
FSW1NM	Monitor arm, slatwall, pivot joint, 1 monitor, no arm	3 ¾	95			3 ¾	95	2	1
SRU24	Slatwall rail	5 ½	140	24	610	1	25	10	5
SRU30	Slatwall rail	5 ½	140	30	762	1	25	11	5
SRU36	Slatwall rail	5 ½	140	36	914	1	25	13	6
SRU48	Slatwall rail	5 ½	140	48	1219	1	25	14	6
SRU60	Slatwall rail	5 ½	140	60	1524	1	25	18	8

Rev1-27-21

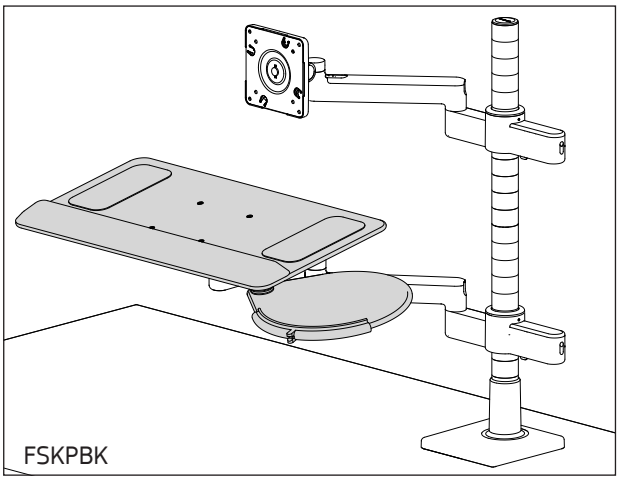
FSKPBK

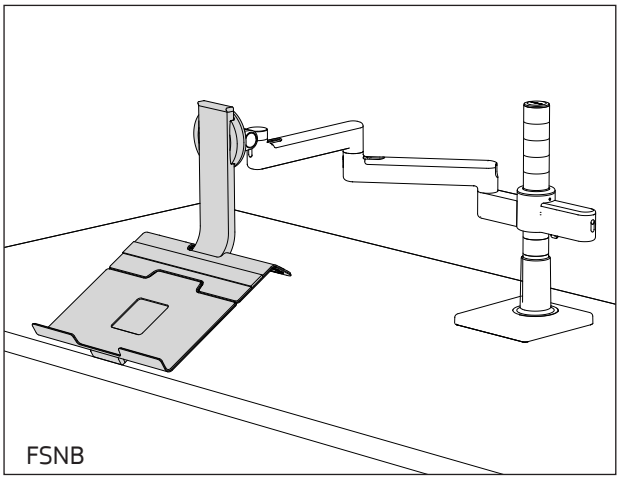
FSNB

ARM MOUNT PLATFORM AND NOTEBOOK HOLDER

Arm Mount Platform, Keyboard and Mouse Tray

- Arm Mount Platform helps to save valuable workspace and mounts to all Symbiote Monitor Arms.
- Keyboard Tray is 10⅝" deep by 20⅛" wide, and includes a black non-skid pad and removable foam wrist rest.
- A 9" diameter round Mouse Tray is included with each Keyboard Tray. Mouse Trays can be mounted on the left or right side of Keyboard Trays and swivel 270° to hide under trays when needed.
- Mouse Trays include a black non-skid pad and moveable stopper to protect the mouse from falling off the tray.
- Load capacity 15 lbs.
- Finish is Black.

Notebook Holder

- Notebook Holder has an adjustable tray and supports notebooks up to 18" for a more ergonomic workspace.
- Holder can attach to any arm, positioning the holder at the optimum height and focal length.
- Viewing angle can be tilted up to 35° forward to reduce screen glare.
- Tray supports notebooks or accessories up to 12 lbs.
- Finish is Silver or White.

How to Specify

Step 1. Product Number

FSKP Keyboard and Mouse Tray Platform
FSNB Monitor Arm, Center Mount

Step 2. Finish Color Code (Notebook Holder)

SG Silver
WA White

Product Number	Description	Width		Depth		Weight	
		in.	[mm]	in.	[mm]	lb.	[kg]
FSKPBK	Keyboard and mouse tray platform, arm, black mount	20 ⅛	511	10 ½	267	4.5	2
FSNBSG	Notebook holder, silver	14	356	11	279	5	2
FSNBWA	Notebook holder, white	14	356	11	279	5	2

Rev 10/0/1/19

MATERIAL HANDLING

Bins and Bin Rails 12.2
Dispensing Rails 12.3
Subcontainers and Subdividers 12.4
Totes 12.5
Tote Rails and Bearers 12.6
Tote Holders 12.7
Mobile Tote Frames 12.8
Mobile Carts 12.9
Mobile Cart Handles, End Covers 12.10
Mobile Cart Base 12.11
Spool Holders and Spindles 12.12
Pharmacy Bag Holders 12.13
Holders 12.14
Overhead Tool Travelers 12.15
Supply Dollies 12.16

12

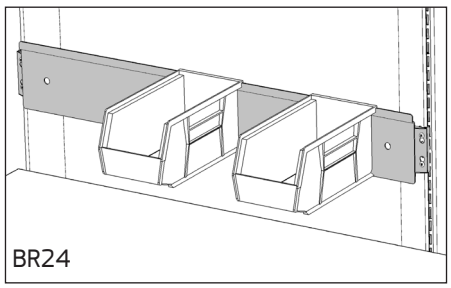
BR24

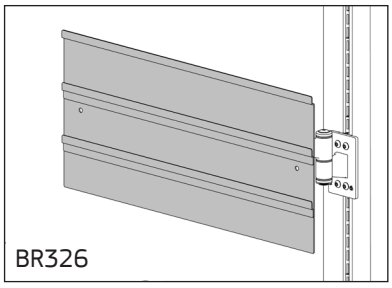
BR326

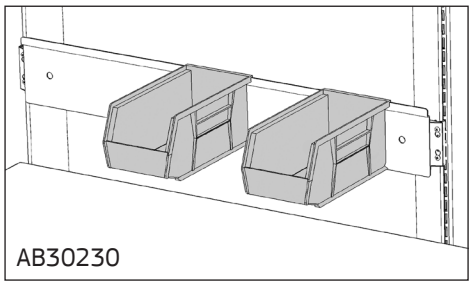
AB30230

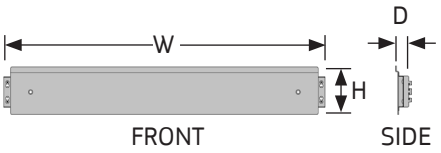

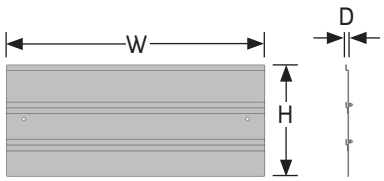

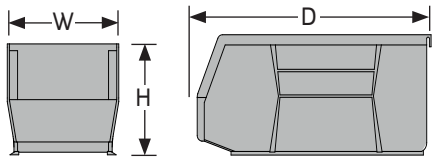

BINS AND BIN RAILS

Bin Rails, Frame Mount

- Bin Rails provide hanging support for generic parts bins.
- Rails mount to frames, adjusting vertically in 1" increments.
- Load capacity 40 lbs. evenly distributed.

Bin Rail, Monitor Arm Mount

- Rails provide articulating support for up to 3 rows of generic parts bins.
- Rails attach to Monitor Arms, sold separately; see pages 11.6-11.8.
- Load capacity 12 lbs. evenly distributed.

Plastic Bins

- Bins provide storage and organization of small items hanging from Bin Rails or can be stacked together.
- Made from a heavy-duty industrial grade polymer.
- Load capacity 30 lbs. Sold in packs of 5.

How to Specify

Step 1. Product Number

BR	Bin Rail, Frame-Mount
BR326	Bin Rail, 3 Tier, Monitor Arm Mount
AB30230	Plastic Bin

Step 2. Width (Bin Rail, Frame-Mount only)

24	24" wide	**30**	30" wide	**36**	36" wide
48	48" wide	**60**	60" wide	**72**	72" wide

Step 3. Paint Color Code (Bin Rail only)

STANDARD

AW	Arctic White	**GL**	Grey Light Smooth
AS	Argent Silver	**GT**	Grey Light Texture
BK	Black	**NW**	Neutral White
BT	Black Texture	**ST**	Sand Texture

Step 4. Plastic Color (Plastic Bins only)

BL	Blue
CL	Clear

Product Number	Description	Height		Width		Depth		Weight	
		in.	[mm]	in.	[mm]	in.	[mm]	lb.	[kg]
BR24	Frame mount	5 ¼	133	24	610	¾	19	5	2
BR30	Frame mount	5 ¼	133	30	762	¾	19	6	3
BR36	Frame mount	5 ¼	133	36	914	¾	19	8	4
BR48	Frame mount	5 ¼	133	48	1219	¾	19	9	4
BR60	Frame mount	5 ¼	133	60	1524	¾	19	11	5
BR72	Frame mount	5 ¼	133	72	1829	¾	19	14	6
BR326	Monitor arm mount, 3-tier	12	305	26	660	½	13	8	4
AB30230BL	Plastic bin, 5-pack, blue	5	127	5 ½	140	10 ⅞	276	½	0.2
AB30230CL	Plastic bin, 5-pack, clear	5	127	5 ½	140	10 ⅞	276	½	0.2

Rev 04/01/19

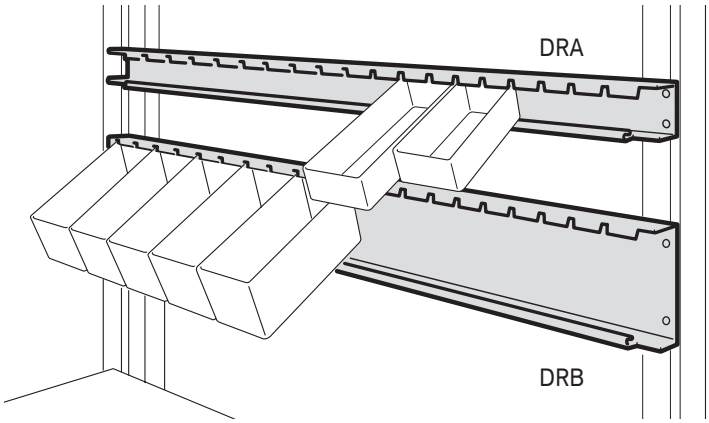

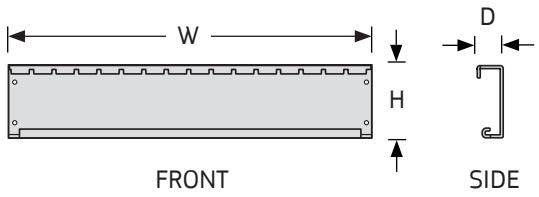

DISPENSING RAILS

- Dispensing Rails provide hanging support for Symbiote Subcontainers.
- Subcontainers hang at a 20° slope when mounted on Dispensing Rails.
- A-size Sub-containers hang on A-size Dispensing Rails and B-size Subcontainers hang on B-size rails.
- Load capacity 50 lbs. evenly distributed.

NOTES

» Subcontainers sold separately; see page 12.4.

» Description below denotes quantity of Subcontainers possible per Dispensing Rail.

How to Specify

Step 1. Product Number

DRA Dispensing Rail, A-Size
DRB Dispensing Rail, B-Size

Step 2. Width

24 24" wide **30** 30" wide **36** 36" wide
48 48" wide **60** 60" wide

Step 3. Paint Color Code

STANDARD

AW Arctic White
AS Argent Silver
BK Black
BT Black Texture
GL Grey Light Smooth
GT Grey Light Texture
NW Neutral White
ST Sand Texture

Product Number	Description	Height		Width		Depth		Weight	
		in.	[mm]	in.	[mm]	in.	[mm]	lb.	[kg]
DRA24	A-size, 5 subcontainers	3 ¼	83	24	610	1 ¼	32	5	2
DRA30	A-size, 6 subcontainers	3 ¼	83	30	762	1 ¼	32	6	3
DRA36	A-size, 7 subcontainers	3 ¼	83	36	914	1 ¼	32	8	4
DRA48	A-size, 10 subcontainers	3 ¼	83	48	1219	1 ¼	32	10	5
DRA60	A-size, 12 subcontainers	3 ¼	83	60	1524	1 ¼	32	13	6
DRB24	B-size, 5 subcontainers	6	152	24	610	2 ¼	57	6	3
DRB30	B-size, 6 subcontainers	6	152	30	762	2 ¼	57	8	4
DRB36	B-size, 7 subcontainers	6	152	36	914	2 ¼	57	9	4
DRB48	B-size, 10 subcontainers	6	152	48	1219	2 ¼	57	12	5
DRB60	B-size, 12 subcontainers	6	152	60	1524	2 ¼	57	15	7

Rev 04/01/19

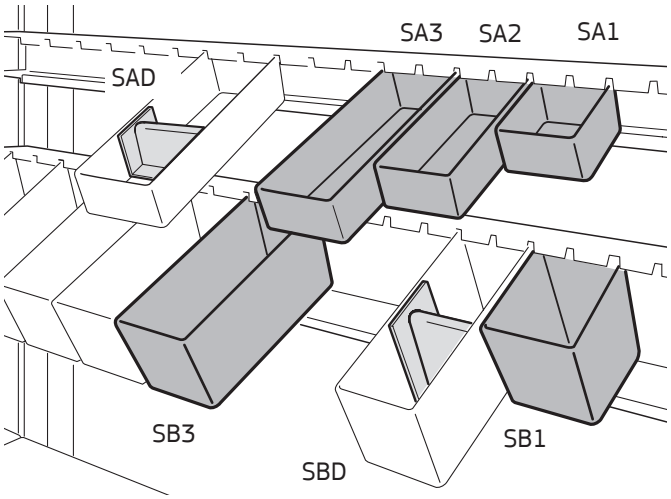

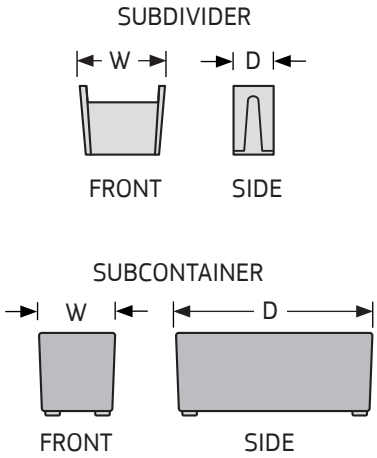

SUBCONTAINERS AND SUBDIVIDERS

Subcontainers

- Sold individually, subcontainers provide storage and organization of small items.
- Subcontainers hang from Dispensing Rails at a 20° slope or lay flat in Totes and Plan Drawers for organization.
- A-size Subcontainers are used with A-size Dispensing Rails and A-size Totes.
- B-size Subcontainers are used with B-size Dispensing Rails and B-size Totes.

Subdividers

- Subdividers divide Subcontainers laterally.
- A-size Subdividers are used with A-size Subcontainers.
- B-size Subdividers are used with B-size Subcontainers.
- Sold in 10 unit packs.

How to Specify

Step 1. Product Number

SA	Subcontainer, A-Size, 2 ¼" H
SB	Subcontainer, B-Size, 5 ¼" H
SAD	Subdivider, A-Size, 10 pack
SBD	Subdivider, B-Size, 10 pack

Step 2. Depth (Subcontainers only)

1	4 ¼" deep
2	9 ¼" deep (not offered for SB)
3	13 ¾" deep

Step 3. Color Code

GY	Grey
LU	Neutral White

Product Number	Description	Height		Width		Depth		Weight	
		in.	[mm]	in.	[mm]	in.	[mm]	lb.	[kg]
SA1	Subcontainer A	2 ¼	57	4 ½	114	4 ½	114	¼	0.1
SA2	Subcontainer A	2 ¼	57	4 ½	114	9 ¼	235	¼	0.1
SA3	Subcontainer A	2 ¼	57	4 ½	114	13 ¾	349	½	0.2
SB1	Subcontainer B	5 ¼	133	4 ½	114	4 ½	114	½	0.2
SB3	Subcontainer B	5 ¼	133	4 ½	114	13 ¾	349	¾	0.3
SAD	Subdivider A, 10 pack	1 ¾	44	4 ¼	108	2	51	1	0.5
SBD	Subdivider B, 10 pack	4	102	4 ¼	108	2	51	1	0.5

Rev 04/26/16

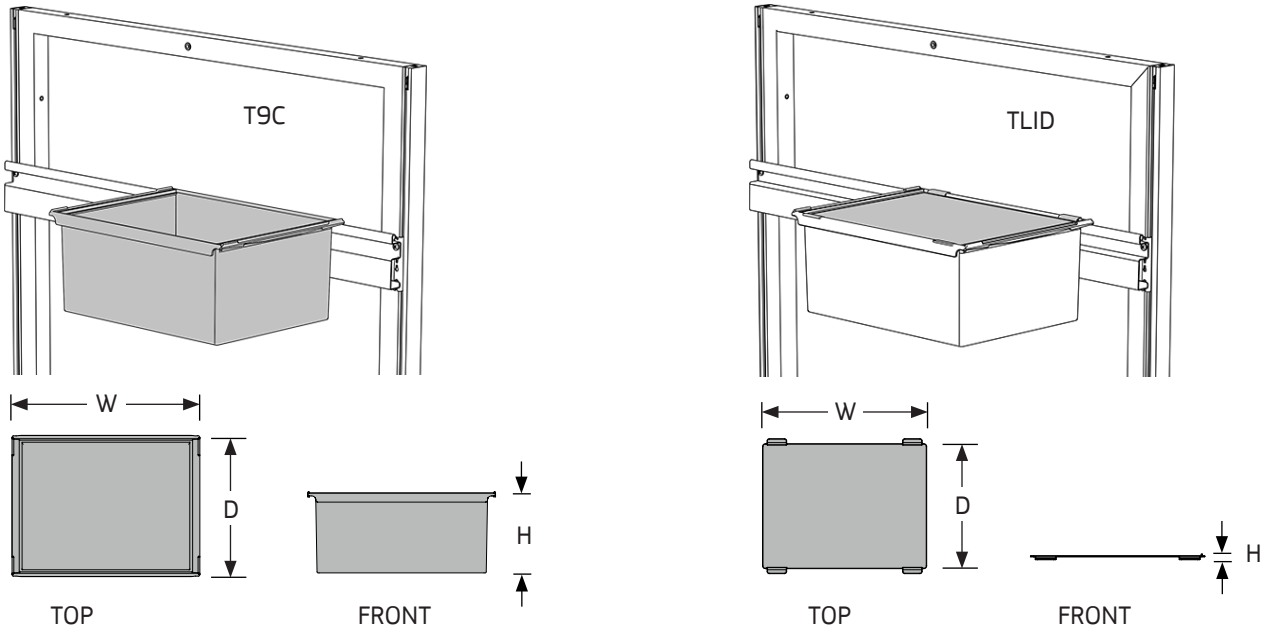

TOTES

- Totes provide storage and a means of transportation for materials in workstations.
- Totes hang from Tote Rails, mount beneath surfaces as drawers using Tote Bearers or slide into Tote Holders and Mobile Tote Frames for use as drawers.
- Load capacity 50 lbs. when used with Tote Rails and 25 lbs. when used with Tote Bearers, Tote Holders and Mobile Tote Frames.
- Totes are made with Zylar® 650 an impact modified styrene acrylic copolymer which provides a balance of clarity and toughness.
- Tote material meets USP XXIII specifications for Class VI plastics
- Tote material is UL 94 HB approved and is recyclable.
- Finish is Ice.

NOTES

» Tote Rails, Tote Bearers, Tote Holders and Mobile Tote Frames sold separately; see pages 12.6 - 12.8.

How to Specify

Step 1. Product Number

T	Tote
TLID	Tote Lid

Step 2. Height (Tote only)

3A	3" high
6B	6" high
9C	9" high

Step 3. Color Code

CE	Ice

Product Number	Description	Height		Width		Depth		Weight	
		in.	[mm]	in.	[mm]	in.	[mm]	lb.	[kg]
T3ACE	A Tote	3	76	20 5/8	524	15 1/2	394	3	1.4
T6BCE	B Tote	6	152	20 5/8	524	15 1/2	394	4	1.8
T9CCE	C Tote	9	229	20 5/8	524	15 1/2	394	5	2.3
TLIDCE	Tote lid	1 1/2	38	18 7/8	479	14 3/8	365	1	0.5

Rev 10/27/20

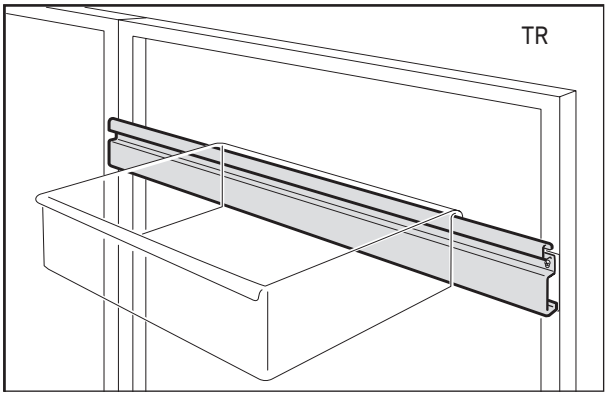

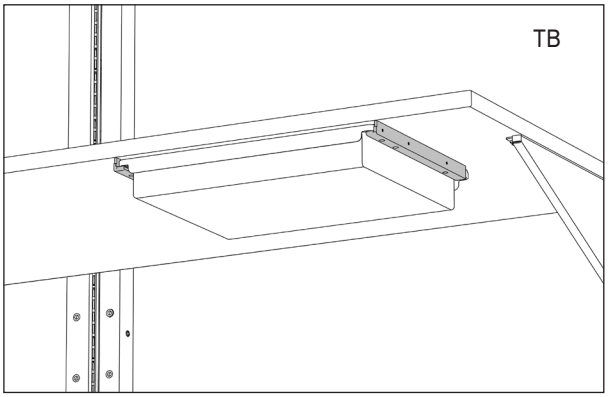

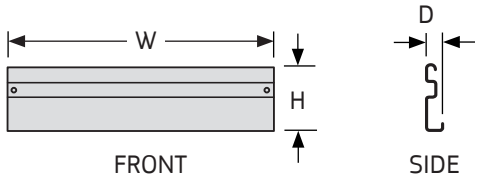

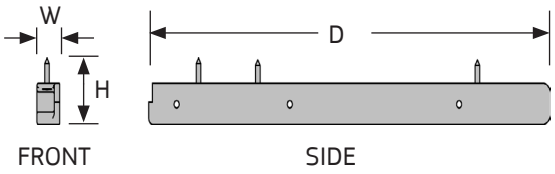

TOTE RAILS AND BEARERS

Tote Rails

- Tote Rails provide hanging support for Symbiote Totes, Rail-Mount Tote Holders and Co/Struc® products.
- Load capacity 200 lbs. evenly distributed. Specify color and width.

Tote Bearers, Pair

- Tote Bearers are compatible with Symbiote Totes and Co/Struc® products (drawers).
- Bearers include an integral stop to prevent Totes from extending out of the track.
- Sold as a pair. Dark Tone plastic finish.

NOTES

» Symbiote Totes sold separately; see page 12.5.

How to Specify

Step 1. Product Number

TR	Tote Rail
TBDT	Tote Bearer, Pair

Step 2. Width (Tote Rail only)

24	24" wide	**30**	30" wide	**36**	36" wide
48	48" wide	**60**	60" wide		

Step 3. Paint Color Code (Tote Rail only)

AW	Arctic White	**GL**	Grey Light Smooth
AS	Argent Silver	**GT**	Grey Light Texture
BK	Black	**NW**	Neutral White
BT	Black Texture	**ST**	Sand Texture

Product Number	Description	Height		Width		Depth		Weight	
		in.	[mm]	in.	[mm]	in.	[mm]	lb.	[kg]
TR24	Tote rail	4 ¾	121	24	610	1 ¼	32	6	2.7
TR30	Tote rail	4 ¾	121	30	762	1 ¼	32	8	3.6
TR36	Tote rail	4 ¾	121	36	914	1 ¼	32	10	4.5
TR48	Tote rail	4 ¾	121	48	1219	1 ¼	32	12	5.4
TR60	Tote rail	4 ¾	121	60	1524	1 ¼	32	15	6.8
TBDT	Tote bearer, pair, dark tone	¾	19	1	25	14 ¼	362	1	0.5

Rev 04/01/19

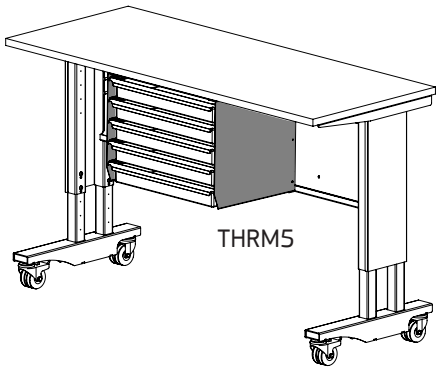

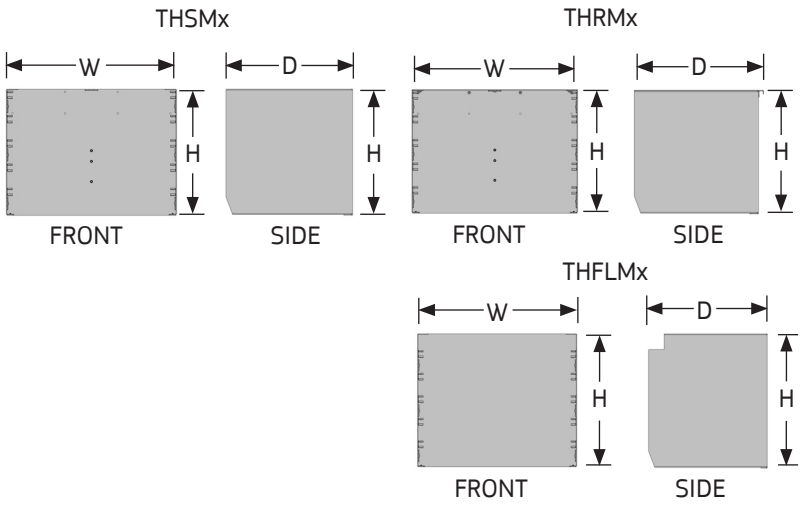

TOTE HOLDERS

- Tote Holders provide storage for Symbiote Totes below a surface, 4-Legged Table, Tetrad Table or Tote Rail.
- Provides 5-slot and 7-slot options spaced in 3" intervals for Symbiote Tote storage.
- Tote Holder load capacity 100 lbs. total; maximum capacity 25 lbs. per Tote.

NOTES

» Rail-Mount Tote Holder requires two Tote Rails mounted horizontally. Tote Rails sold separately; see page 12.6.

» Totes sold separately; see page 12.5.

How to Specify

Step 1. Product Number

THSM Tote Holder, Surface Mount
THRM Tote Holder, Rail Mount
THFLM Tote Holder, 4-Legged Table Mount

Step 2. Number of Tote Slots

5 5-slot
7 7-slot

Step 3. Paint Color Code

AW Arctic White
AS Argent Silver
BK Black
BT Black Texture
GL Grey Light Smooth
GT Grey Light Texture
NW Neutral White
ST Sand Texture

Product Number	Description	Height		Width		Depth		Weight	
		in.	[mm]	in.	[mm]	in.	[mm]	lb.	[kg]
THSM5	Surface-Mount, 5-slot	15 ⅔	397	21	534	15 ¾	399	21	9.7
THSM7	Surface-Mount, 7-slot	21 ½	548	21	534	15 ¾	399	29	13.2
THRM5	Rail-Mount, 5-slot	15 ⅔	397	21	534	16 ⅖	417	28	12.7
THRM7	Rail-Mount, 7-slot	21 ½	548	21	534	16 ⅖	417	36	16.2
THFLM5	4-Legged Table Mount, 5-slot	17 ⅜	447	21	534	13 ⅔	347	23	10.5
THFLM7	4-Legged Table Mount, 7-slot	23 ⅜	599	21	534	13 ⅔	347	31	14.1

Rev 02/13/25

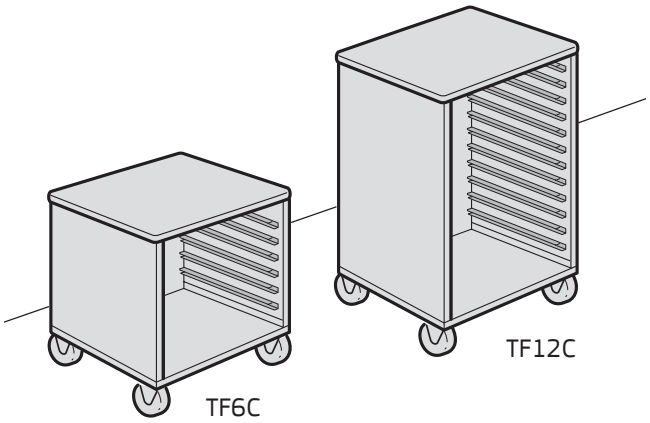

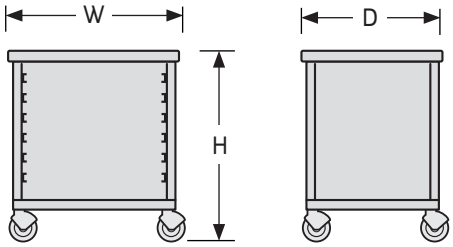

MOBILE TOTE FRAMES

- Tote Frames, available in standard and dissipative* laminates, provide mobile storage for Symbiote Totes.
- Steel unit has a 1" high standard or dissipative laminate top with matching vinyl Edge-band, four 3" twin-wheel braking casters and Tote Slots placed at 3" intervals.
- Six-slot Tote Frames provide 18" of usable height; 8 slot-frames provide 24"; and, 12 slot-frames provide 36".
- *Nevamar® Static Dissipative Laminate (SDL) Surfaces have a Point to point and point to ground resistance of 1 x 106 to 1 x 109 ohms @ 10-60% relative humidity. Conforms to ESD Association Standard ESD-S4.1.
- Dissipative surfaces include a Laminate Grounding Terminal Kit and Ground Chain.
- Load capacity 250 lbs. per frame; maximum capacity 25 lbs. per individual Tote.

NOTES

» Symbiote Totes sold separately; see page 12.5.
» If either paint or laminate is dissipative, use the dissipative price.
» Other dissipative laminates available upon request; consult factory.
» Customers are responsible for specifying ESD surface requirements; corporate ESD standards must be consulted prior to ordering.

How to Specify

Step 1. Product Number

TF Mobile Tote Frame

Step 2. Slots

6C 6-slot **8C** 8-slot **12C** 12-slot

Step 3. Paint Color Code

STANDARD

AW Arctic White
AS Argent Silver
BK Black
BT Black Texture
GL Grey Light Smooth
GT Grey Light Texture
NW Neutral White
ST Sand Texture

Step 4. Laminate Color Code

STANDARD

AW Arctic White
BK Black
GF Grey Fleck
GL Grey Light
NW Neutral White
SA Sand
WF White Fleck

DISSIPATIVE

DAW Dissipative Arctic White
DBK Dissipative Black
DG Dissipative Grey Light
DNW Dissipative Neutral White

Product Number	Description	Height		Width		Depth		Weight	
		in.	[mm]	in.	[mm]	in.	[mm]	lb.	[kg]
TF6C	6-slot	23 ½	597	22 ½	572	16 ½	419	36	16.3
TF8C	8-slot	29 ½	749	22 ½	572	16 ½	419	56	25.4
TF12C	12-slot	41 ½	1054	22 ½	572	16 ½	419	77	34.9

Rev 11/23/26

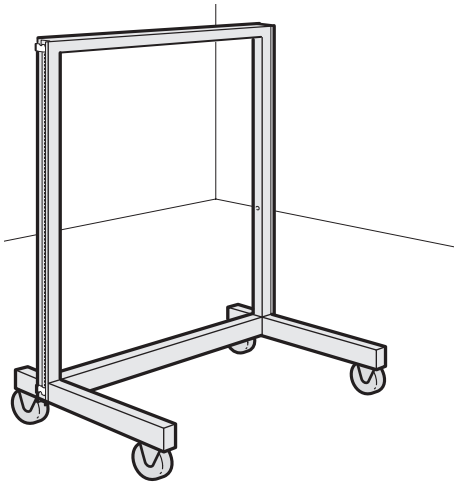

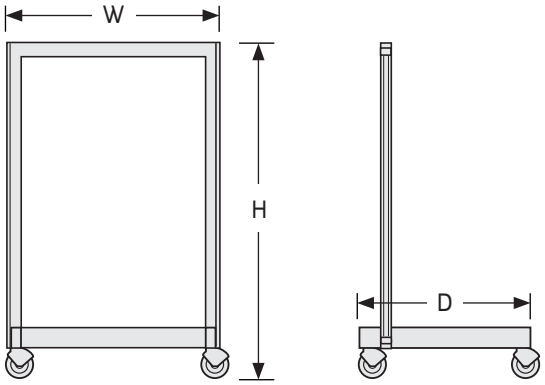

MOBILE CARTS

- Mobile Cart functions as a single-sided mobile workstation; or as an assembly process or rack cart.
- 2" steel frame provides structural support for and permits vertical adjustment of components in 1" increments. 52" high carts provide 43" of usable hanger track; 66" high carts provide 57".
- Equipped with connection points for end mounting of Monitor Arms and attachment points for ESD grounding hardware.
- Includes 4" diameter polypropylene casters with totalock brakes (simultaneously locks the swivel and wheel).
- Load capacity 500 lbs. evenly distributed.

NOTES

» Maximum component depth is 24 inches.
» Mount components only on the front side of Mobile Carts; plastic tubing inserted in the back side prevents mounting of components.
» Optional Mobile Cart Handles and End Covers to finish exposed hardware available. Sold separately; see page 12.10.

How to Specify

Step 1. Product Number

MCS Mobile Cart

Step 2. Height

52 52" high **66** 66" high

Step 3. Width

24 24" width **30** 30" width

Step 4. Paint Color Code

STANDARD

AW Arctic White
AS Argent Silver
BK Black
BT Black Texture
GL Grey Light Smooth
GT Grey Light Texture
NW Neutral White
ST Sand Texture

Product Number	Description	Height		Width		Depth		Weight	
		in.	[mm]	in.	[mm]	in.	[mm]	lb.	[kg]
MCS5224	Mobile cart	52	1321	24	610	29 ½	749	60	27.2
MCS5230	Mobile cart	52	1321	30	762	29 ½	749	64	29.0
MCS6624	Mobile cart	66	1676	24	610	29 ½	749	67	30.4
MCS6630	Mobile cart	66	1676	30	762	29 ½	749	71	32.2

Rev 04/01/19

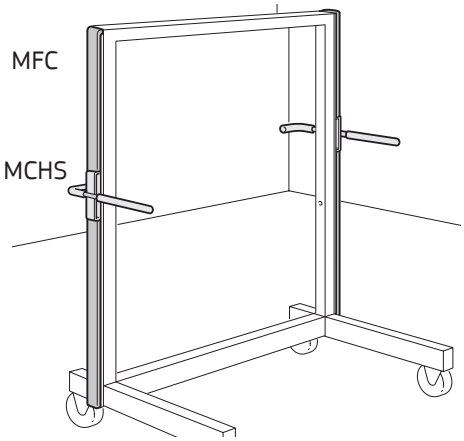

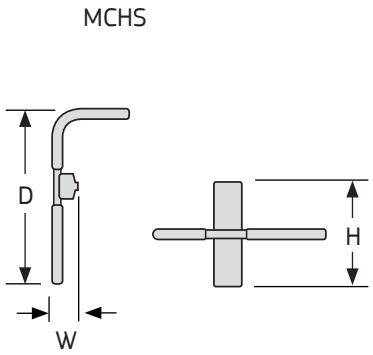

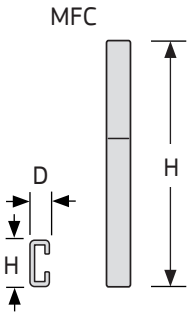

MOBILE CART HANDLES, END COVERS

Mobile Cart Handles

- Mobile Cart Handles bolt to the ends of Mobile Carts and are composed of 1" diameter steel tubing covered with black foam grip.
- Handles mount in one vertical position only when used in conjunction with Mobile Cart End Covers.
- Handles are adjustable in 6" increments when not used with other components.
- Sold in pairs.
- Finish is Black Texture.

Mobile Cart End Covers

- Metal covers finish exposed hardware on the ends of Mobile Carts when Mobile Cart Handles are used.
- Includes four metal covers to finish the exposed hardware above and below the handles on each side of the cart, as well as attachment hardware.
- Finish must be specified.

NOTES

» To finish exposed hardware on the ends of Mobile Carts when handles are not used, use Panel End Covers. 52" high carts require two EC48 and 66" high carts require two EC62. Sold separately; see page 2.12.

» Tote drawers available; consult factory.

How to Specify

Step 1. Product Number

MCHSBT Mobile Cart Handles
MFC Mobile Cart End Covers with handles
EC End Cover (no handles)

Step 2. Height (MFC only)

52 52" high **66** 66" high

Step 3. Height (EC only)

48 48" high **62** 62" high

Step 4. Paint Color Code

STANDARD

AW Arctic White
AS Argent Silver
BK Black
BT Black Texture
GL Grey Light Smooth
GT Grey Light Texture
NW Neutral White
ST Sand Texture

Product Number	Description	Height		Width		Depth		Weight	
		in.	[mm]	in.	[mm]	in.	[mm]	lb.	[kg]
MCHSBT	Handle, pair	7	178	2 ½	64	16	406	6	2.7
MFC52	End cover, pair with handle cutouts	40	1016	2	51	½	13	2	0.9
MFC66	End cover, pair with handle cutouts	54	1372	2	51	½	13	3	1.4
EC48	End cover	48	1219	2	51	½	13	3	1.4
EC62	End cover	62	1575	2	51	½	13	4	1.8

Rev 04/01/19

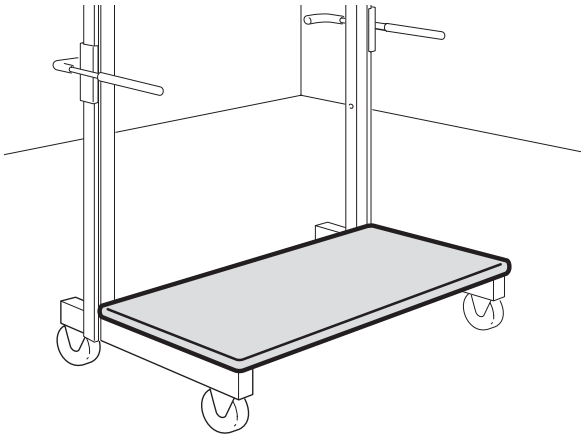

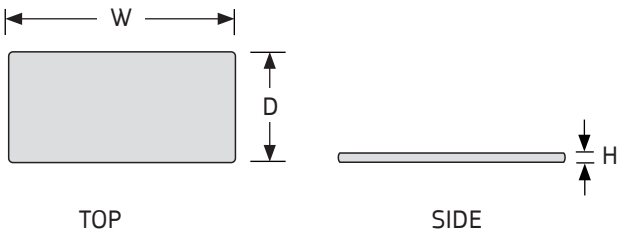

MOBILE CART BASE

- Available in standard and dissipative laminates*, the 1¼" high base attaches to Mobile Cart feet with hook and loop strips.
- Base has square corners with matching edge banding.
- * Nevamar® Static Dissipative Laminate (SDL) Surfaces have a Point to point and point to ground resistance of 1 x 106 to 1 x 109 ohms @ 10-60% relative humidity. Conforms to ESD Association Standard ESD-S4.1.
- Dissipative surfaces include a Laminate Grounding Terminal Kit and Ground Chain.
- Load capacity 200 lbs. evenly distributed.

NOTES

» Mobile Carts sold separately; see page 12.9.
» Other dissipative laminates available upon request; consult factory.
» Customers are responsible for specifying ESD surface requirements; corporate ESD standards must be consulted prior to ordering.

How to Specify

Step 1. Product Number

MFB Mobile Cart Base

Step 2. Laminate Type

LT Standard **DT** Dissipative

Step 3. Width

24 24" width **30** 30" width

Step 4. Laminate Color Code

STANDARD

AW Arctic White
BK Black
GF Grey Fleck
GL Grey Light
NW Neutral White
SA Sand
WF White Fleck

DISSIPATIVE

DBK Dissipative Black
DG Dissipative Grey
DNW Dissipative Neutral White
DW Dissipative White

Product Number	Description	Height		Width		Depth		Weight	
		in.	[mm]	in.	[mm]	in.	[mm]	lb.	[kg]
MFBLT24	Standard laminate	1 ¼	32	24	610	24	610	20	9.1
MFBLT30	Standard laminate	1 ¼	32	30	762	24	610	24	10.9
MFBDT24	Dissipative laminate	1 ¼	32	24	610	24	610	20	9.1
MFBDT30	Dissipative laminate	1 ¼	32	30	762	24	610	24	10.9

Rev 11/23/26

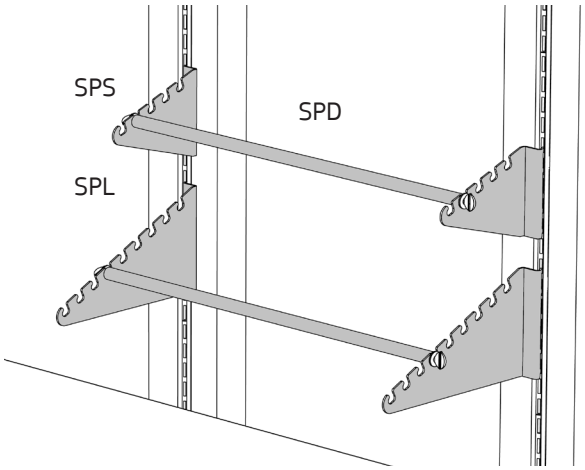

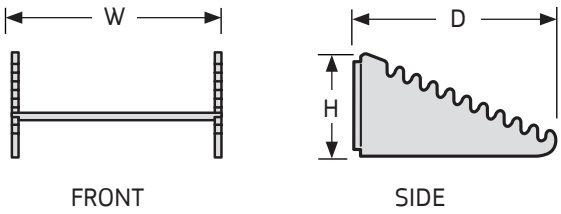

SPOOL HOLDERS AND SPINDLES

- Spool Holders display spooled material such as labels, wires and cables in workstations.
- Includes one ⅝" diameter spindle and two brackets.
- Load capacity 100 lbs. evenly distributed.
- Bracket finish is Black Texture.

NOTES

» Additional spindles can be attached to a single Spool Holder. Order separately; see below.

How to Specify

Step 1. Product Number

SPS	Spool Holder, Short
SPL	Spool Holder, Long
SPD	Spindle

Step 2. Width

24 24" wide **30** 30" wide **36** 36" wide
48 48" wide

Product Number	Description	Height		Width		Depth		Weight	
		in.	[mm]	in.	[mm]	in.	[mm]	lb.	[kg]
SPS24BT	Frame mount, short	4 ½	114	22	559	6	152	3	1.4
SPS30BT	Frame mount, short	4 ½	114	28	711	6	152	3	1.4
SPS36BT	Frame mount, short	4 ½	114	34	864	6	152	3 ½	1.6
SPS48BT	Frame mount, short	4 ½	114	46	1168	6	152	4 ½	2.0
SPL24BT	Frame mount, long	5 ½	140	22	559	9 ¾	248	4	1.8
SPL30BT	Frame mount, long	5 ½	140	28	711	9 ¾	248	4	1.8
SPL36BT	Frame mount, long	5 ½	140	34	864	9 ¾	248	4 ½	2.0
SPL48BT	Frame mount, long	5 ½	140	46	1168	9 ¾	248	5 ½	2.5
SPD24	Spindle	⅝	16	22	559	⅝	16	¼	0.1
SPD30	Spindle	⅝	16	28	711	⅝	16	¼	0.1
SPD36	Spindle	⅝	16	34	864	⅝	16	¼	0.1
SPD48	Spindle	⅝	16	46	1168	⅝	16	¼	0.1

Rev 11/13/13

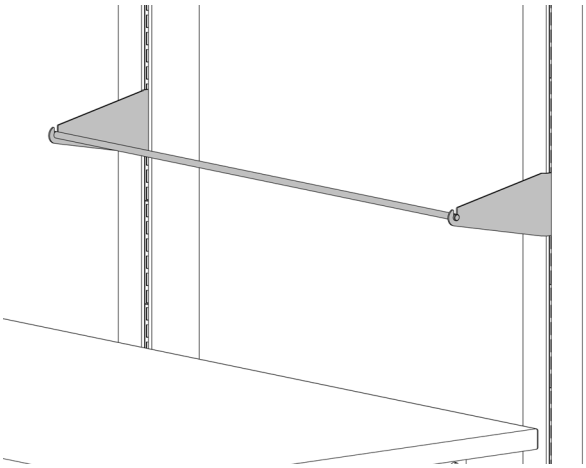

PHBH

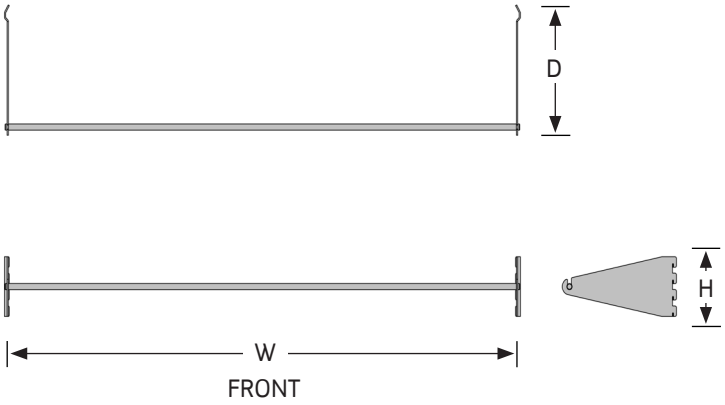

PHARMACY BAG HOLDERS

- Pharmacy Bag Holders are used to manage and hang pharmacy bags used in pharmacy applications.
- Includes one 3/8" diameter rod and two notched side brackets.
- Pharmacy Bag Holder brackets mount to Ultra Frames and ErgoStat Riser Frames.
- Load capacity 10 lbs.

NOTES

» Only side mounting brackets are painted, the 3/8" diameter rods are not painted.

» Do not mount to ErgoStat Pro style Riser Frames.

How to Specify

Step 1. Product Number

PHBH

Step 2. Width

24 24" wide **30** 30" wide
36 36" wide

Step 3. Paint Color Code

AS	Argent Silver	**GL**	Grey Light Smooth
AW	Arctic White	**GT**	Grey Light Texture
BK	Black	**NW**	Neutral White
BT	Black Texture	**ST**	Sand Texture

Product Number	Description	Height		Width		Depth		Weight	
		in.	[mm]	in.	[mm]	in.	[mm]	lb.	[kg]
PHBH24	Pharmacy Bag Holder	3.64	92	24	606	8	195	2	0.8
PHBH30	Pharmacy Bag Holder	3.64	92	30	759	8	195	2	0.9
PHBH36	Pharmacy Bag Holder	3.64	92	36	911	8	195	2	0.9

Rev 05/20/26

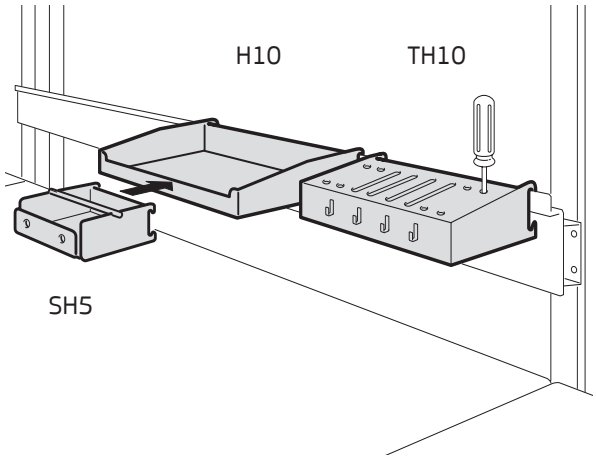

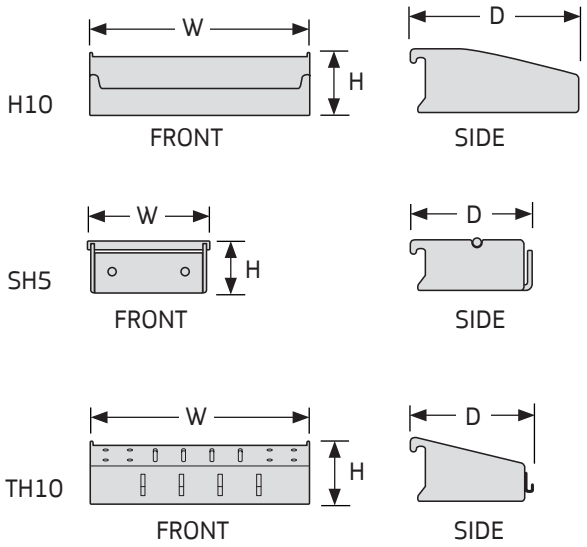

HOLDERS

- Holders provide storage for small parts, tools, solder and work aids in workstations.
- Holders hang from Bin Rails.
- Tool Holders and Solder Holders hang from Bin Rails or from the front of Holders.
- Solder Holders include a spindle.

NOTES

» Bin Rails sold separately; see page 12.2.

How to Specify

Step 1. Product Number

H10	Holder
SH5	Solder Holder
TH10	Tool Holder

Step 2. Paint Color Code

STANDARD

AW	Arctic White	**GL**	Grey Light Smooth
AS	Argent Silver	**GT**	Grey Light Texture
BK	Black	**NW**	Neutral White
BT	Black Texture	**ST**	Sand Texture

Product Number	Description	Height		Width		Depth		Weight	
		in.	[mm]	in.	[mm]	in.	[mm]	lb.	[kg]
H10	Holder	2 ½	64	10	254	5 ¾	146	1	0.5
SH5	Solder holder	2	51	4	102	3 ½	89	1	0.5
TH10	Tool holder	2	51	9	229	4	102	1	0.5

Rev 04/01/19

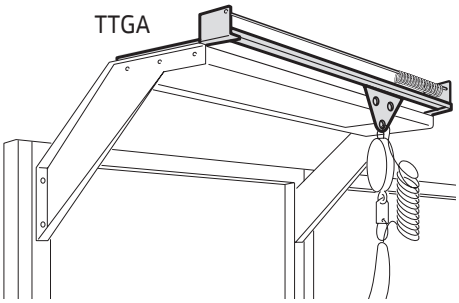

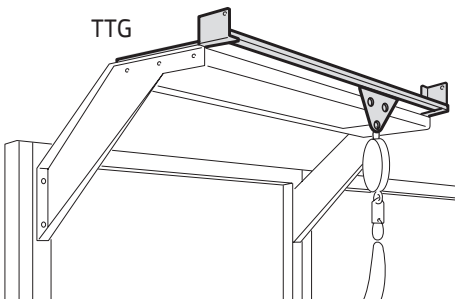

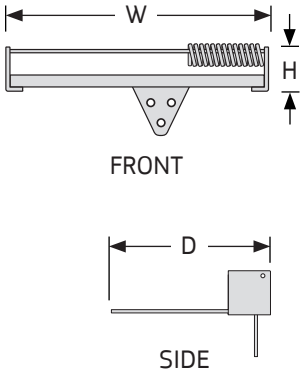

OVERHEAD TOOL TRAVELERS

- Tool Travelers suspend small hand tools above workstations providing 8" of fore and aft adjustment.
- Travelers attach to the top of Cantilever Light Brackets with or without the use of Task Lights.
- Units without air include a rail, one car and two end supports.
- Units with air include a rail, one car with air adapter ending in ¼" FPT, two end supports, a ⅜" push-in fitting for air feed of ½" OD tube and a ¼" ID coiled poly tube.
- Load capacity 50 lbs.
- Finish is Black Texture.

NOTES

» Cantilever Light Brackets sold separately; see page 8.8.

» Additional Tool Traveler Cars sold separately; see below. Two cars maximum per rail.

» Tool Traveler Cars with Air include all parts needed to add the car to a Tool Traveler in the field.

» Compressed Air Coil Tube Kits (CAC) to connect the air tool to the car sold separately; see page 8.23.

How to Specify

Step 1. Product Number

TTG	Tool Traveler without air
TCGA	Tool Traveler with air

Step 2. Width (Tool Traveler)

48 48" wide **60** 60" wide **72** 72" wide

Product Number	Description	Height		Width		Depth		Weight	
		in.	[mm]	in.	[mm]	in.	[mm]	lb.	[kg]
TTG48BT	Without air	4 ½	114	48	1219	12 ½	318	6	2.7
TTG60BT	Without air	4 ½	114	60	1524	12 ½	318	7	3.2
TTG72BT	Without air	4 ½	114	72	1829	12 ½	318	8	3.6
TTGA48BT	With air	4 ½	114	48	1219	12 ½	318	8	3.6
TTGA60BT	With air	4 ½	114	60	1524	12 ½	318	9	4.1
TTGA72BT	With air	4 ½	114	72	1829	12 ½	318	10	4.5
TCGBT	Car without air	4 ½	114	5 ½	140	¼	6	1	0.5
TCGABT	Car with air	4 ½	114	5 ½	140	¼	6	2	0.9

Rev 01/29/09

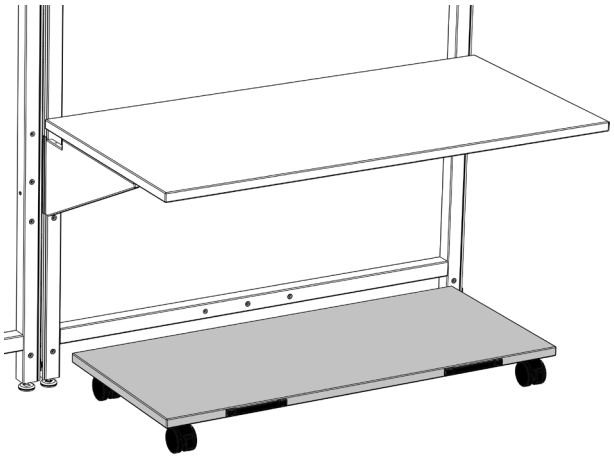

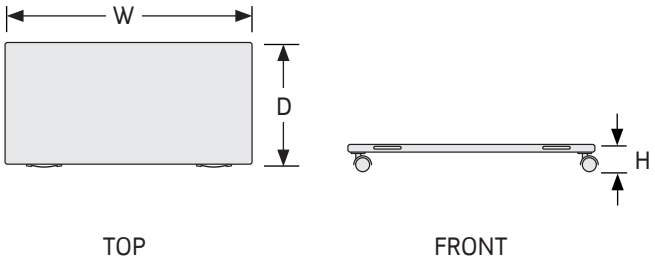

SUPPLY DOLLIES

- Supply Dollies provide mobile storage for general supply items, reagents and printers.
- Includes a 1¼" high laminated base with matching 3MM PVC Edge-band, 3" twin wheel braking casters and handles on the front face.
- Load capacity 250 lbs. evenly distributed.

NOTES

» Dollies are sized to fit between two Ultra Leg Supports on a workstation.

How to Specify

Step 1. Product Number

SDOL24

Step 2. Width

18	18" width	**24**	24" width	**30**	30" width
42	42" width	**54**	54" width	**66**	66" width

Step 3. Laminate Color Code

AW	Arctic White	**NW**	Neutral White
BK	Black	**SA**	Sand
GF	Grey Fleck	**WF**	White Fleck
GL	Grey Light		

Product Number	Description	Height		Width		Depth		Weight	
		in.	[mm]	in.	[mm]	in.	[mm]	lb.	[kg]
SDOL2418	Supply Dolly	4 ¾	121	18	457	24	610	14	6
SDOL2424	Supply Dolly	4 ¾	121	24	610	24	610	19	9
SDOL2430	Supply Dolly	4 ¾	121	30	762	24	610	24	11
SDOL2442	Supply Dolly	4 ¾	121	42	1067	24	610	33	15
SDOL2454	Supply Dolly	4 ¾	121	54	1372	24	610	43	20
SDOL2466	Supply Dolly	4 ¾	121	66	1676	24	610	52	24

Rev 06/20/24