SECTION 7. STORAGE / ACCESSORIES

Pedestal Drawers, Hanging 7.2
Pencil Drawer 7.3
Totes and Tote Bearers 7.4
Tote Holders, Surface Mount 7.5
Storage Bins 7.6
White Board 7.7
Privacy Panel / Tackable Insert 7.8
Pegboard 7.9
Riser Frame Drawers 7.10

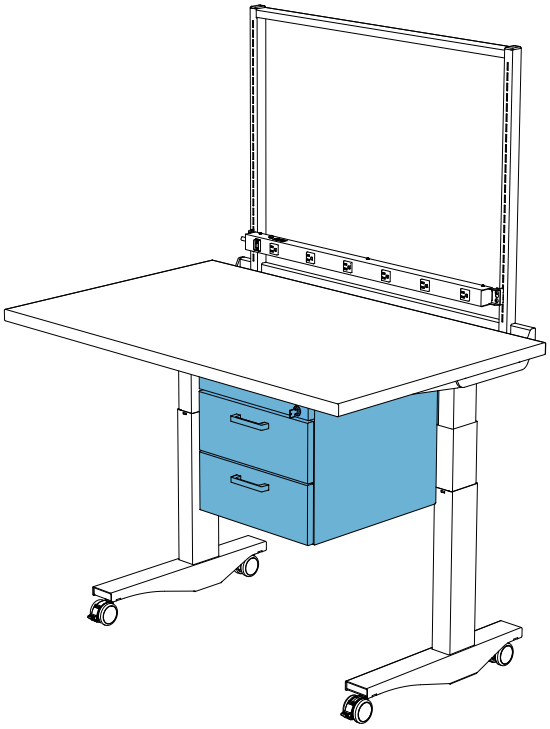

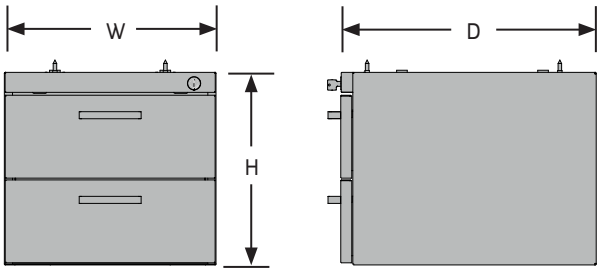

FRONT SIDE

PEDESTAL DRAWERS, HANGING

Pedestal drawers have double-wall drawer fronts and drawer sides. Drawers feature ball-bearing slides with quick disconnect and anti-rebound features (full-extension slides on file drawers, ¾-extension on box drawers). Pedestals meet or exceed ANSI-BIFMA standards for safety and reliability.

- Load capacity is up to 50 lbs. per drawer, not to exceed 150 lbs. per unit.
- Pedestals are keyed randomly (UM226-425) unless otherwise specified. Master keys and core removal keys available; consult factory.

How to Specify

Step 1. Product Number

PH

Step 2. Drawer Size / Style

6 box, maximum 2
12 file, maximum 1

Step 3. Paint Color Code

AS Argent Silver
AW Arctic White
BK Black
GL Grey Light
NW Neutral White

Product Number	Description	Height		Width		Depth		Weight	
		in.	[mm]	in.	[mm]	in.	[mm]	lb.	[kg]
PH6	Hanging box	7 ⅝	194	15	381	18	457	22	10.0
PH66	Hanging box/box	13 ⅝	346	15	381	18	457	33	15.0
PH12	Hanging file	13 ⅝	346	15	381	18	457	28	12.7

Rev 07.10.26

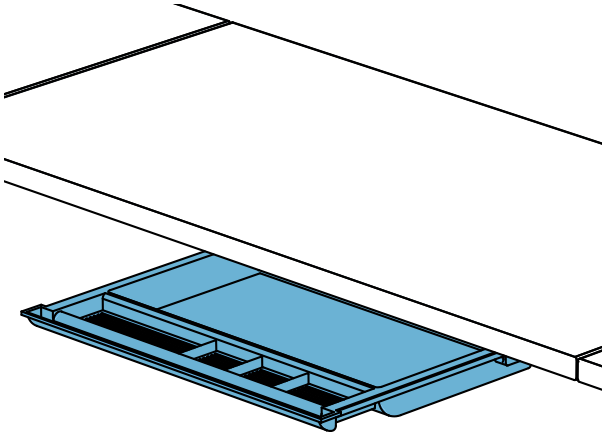

PENCIL DRAWER

Black plastic drawers provide storage for pencils, pens, office accessories and other small items. Drawers only mount under standard and corner work surfaces > 24" deep.

- Surfaces are not pre-drilled for pencil drawers.
- Load capacity is 25 lbs.

How to Specify

Step 1. Product Number

PD2015BK

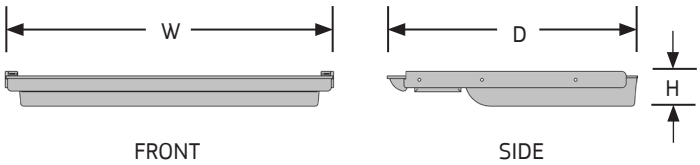

Product Number	Description	Height		Width		Depth		Weight	
		in.	[mm]	in.	[mm]	in.	[mm]	lb.	[kg]
PD2015BK	Pencil drawer, black	2	51	21	533	18	457	5	2.3

Rev 07.10.26

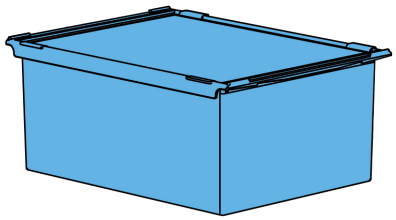

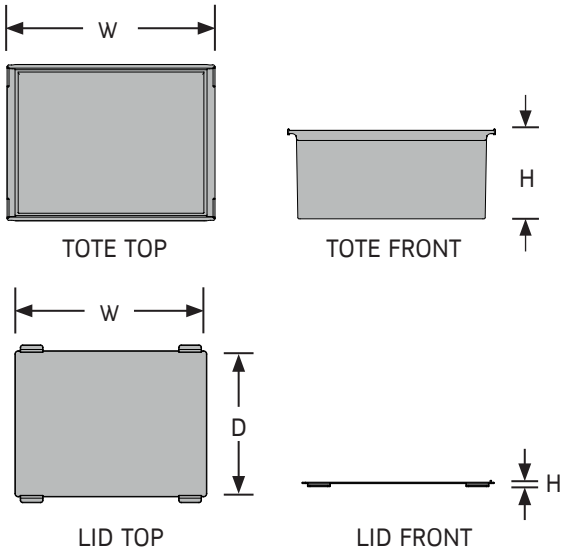

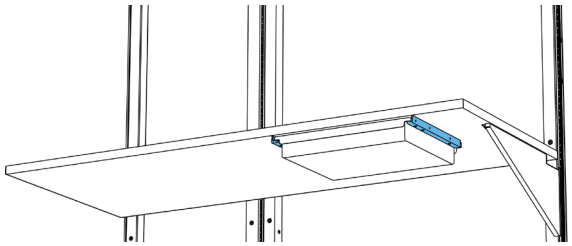

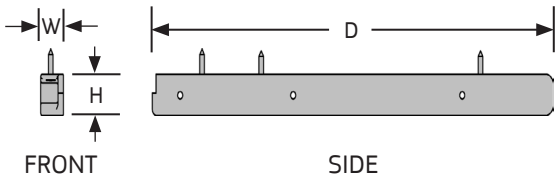

TOTES AND TOTE BEARERS

Totes

Totes provide storage and a means of transportation for materials in workstations. Totes mount beneath surfaces as drawers using Tote Bearers or slide into Tote Holders for use as drawers.

- Load capacity is 25 lbs. when used with Tote Bearers and Tote Holders.
- Tote Bearers (see below) and Surface Mount Tote Holders (see page 7.5) are both sold separately.
- Tote finish is Ice.
- Tote Lid sold separately.

How to Specify

Step 1. Product Number

T3A 3" High
T6B 6" High
T9C 9" High

Step 2. Finish Color Code

CE Ice

Tote Bearers

Tote Bearers are compatible with Symbiote Totes and Co/Struc® products. Bearers include an integral stop to prevent Totes from extending out of the track. Sold as a pair. Plastic finish is Dark Tone.

- Tote Drawers are available. Contact Symbiote customer service for pricing and availability.
- Tote Bearers only mount under standard and corner work surfaces > 24" deep.

How to Specify

Step 1. Product Number

TBDT

Product Number	Description	Height		Width		Depth		Weight	
		in.	[mm]	in.	[mm]	in.	[mm]	lb.	[kg]
T3ACE	A tote	3	76	20 ⅝	524	15 ½	394	3	1.4
T6BCE	B tote	6	152	20 ⅝	524	15 ½	394	4	1.8
T9CCE	C tote	9	229	20 ⅝	524	15 ½	394	5	2.3
TBDT	Tote bearer, pair	¾	19	1	25	14 ¼	362	1	.5

Rev 07.10.26

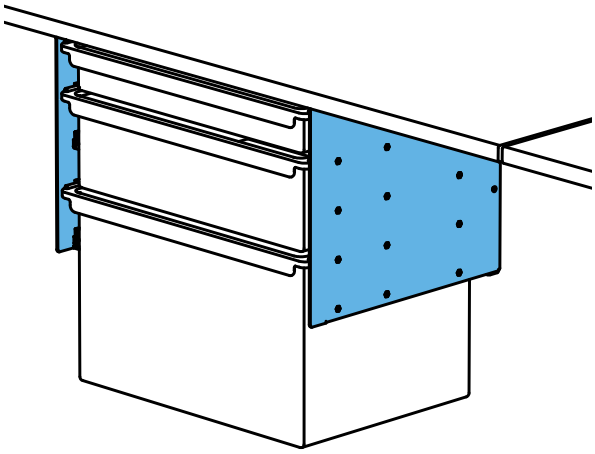

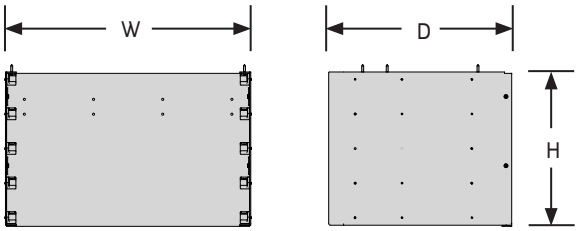

TOTE HOLDERS, SURFACE MOUNT

Tote Holders provide storage for Symbiote Totes below a work- surface. Steel units include five slots in 3" intervals for Tote storage. Tote Holders only mount under standard and corner work surfaces > 24" deep.

- Load capacity 125 lbs. total with a maximum capacity of 25 lbs. per Tote.
- Totes sold separately; see page 7.4.

How to Specify

Step 1. Product Number

STHS5

Step 2. Paint Color Code

AS Argent Silver
AW Arctic White
BK Black
GL Grey Light
NW Neutral White

Product Number	Description	Height		Width		Depth		Weight	
		in.	[mm]	in.	[mm]	in.	[mm]	lb.	[kg]
STHS5	Surface mount	13 3/8	340	21 1/4	540	15 7/8	403	25	11.3

Rev 07.10.26

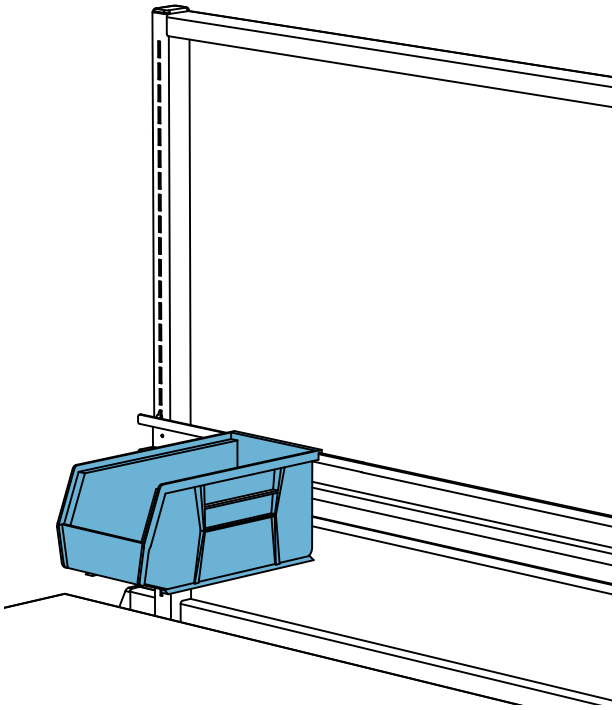

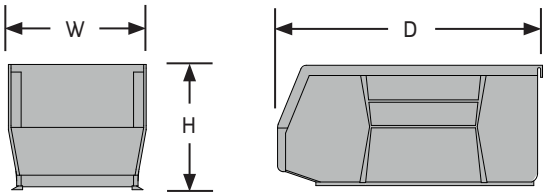

FRONT SIDE

STORAGE BINS

Bins provide storage and organization of small items. Made from a heavy-duty industrial grade polymer, Bins hang from Slatwall/Bin Rails or stack together. Load capacity is 30 lbs per bin.

- Sold in packages of 5.
- Available in blue (BL) or clear (CL).

How to Specify

Step 1. Product Number

AB30230

Step 2. Finish Color Code

BL Blue
CL Clear

Product Number	Description	Height		Width		Depth		Weight	
		in.	[mm]	in.	[mm]	in.	[mm]	lb.	[kg]
AB30230BL	Akro Bin, 5-pack, blue	5	127	5 ½	140	10 ⅞	276	½	0.2
AB30230CL	Akro Bin, 5-pack, clear	5	127	5 ½	140	10 ⅞	276	½	0.2

Rev 07.10.26

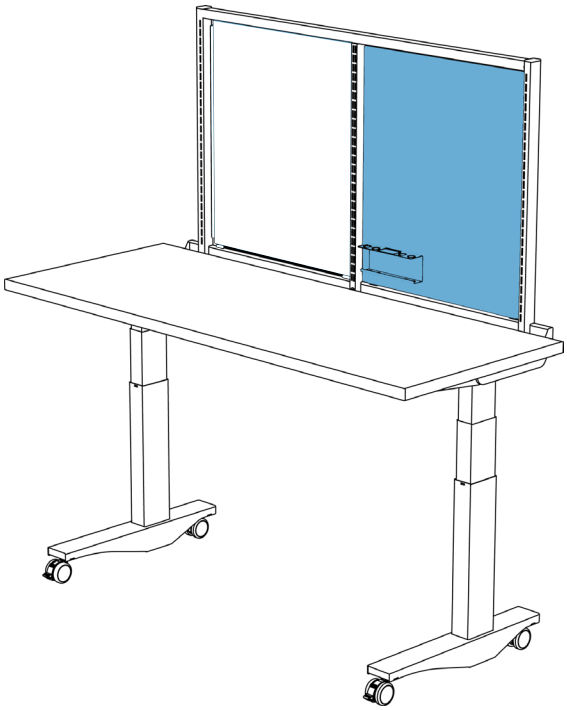

WHITE BOARD

Whiteboards provide a writeable surface that is also magnetic. It mounts on the inside of the Pro Riser Frame and sits flush to the front of the frame. The brackets to attach to the frame will be black in color.

- White Board includes a black tray used to hold up to four dry erase markers and an eraser. Tray has a high energy magnet on the back for mounting anywhere on the White Board.

How to Specify

Step 1. Product Number

PMBE29 White Board

Step 2. Width

24 24" wide
30 30" wide
36 36" wide

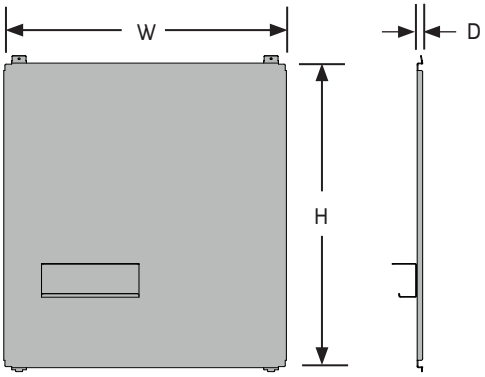

WHITE BOARD PANEL FRONT SIDE

Product Number	Description	Height		Width		Depth		Weight	
		in.	[mm]	in.	[mm]	in.	[mm]	lb.	[kg]
PMBE2924	White board	25 ⅓	643	22	559	⅛	3.175	6	2.8
PMBE2930	White board	25 ⅓	643	28	711	⅛	3.175	8	3.5
PMBE2936	White board	25 ⅓	643	34	864	⅛	3.175	9	4.0

Rev 09.03.26

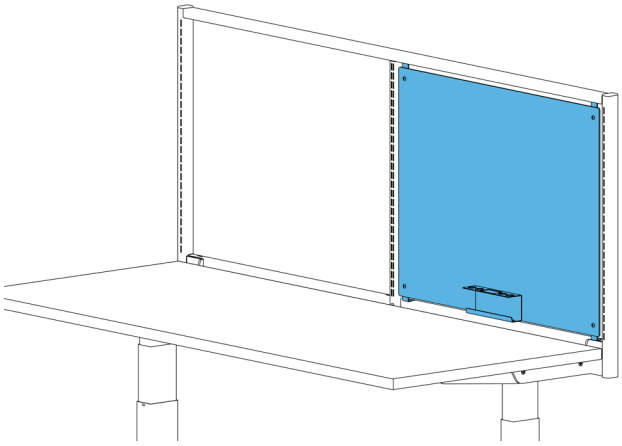

PRIVACY PANEL / TACKABLE INSERT

The Privacy Panel and Tackable Insert work together to provide a usable division of space. The Privacy Panel is painted steel and houses the Tackable Insert. The tackable insert is a low-density foam core covered with fabric. It attaches to the Privacy Panel with high energy magnetic strips.

- Privacy Panels and Tackable Inserts are sold separately.
- No tools necessary for installation.

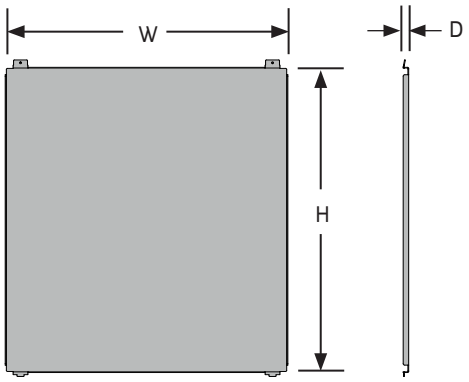

PRIVACY PANEL FRONT SIDE

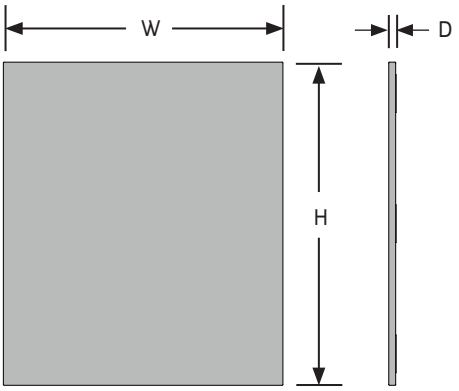

TACKABLE INSERT FRONT SIDE

How to Specify

Step 1. Product Number

PRPM29 Privacy Panel
PPT29 Tackable Insert

Step 2. Width

24 24" wide
30 30" wide
36 36" wide

Step 3. Paint Color Code *(Privacy Panel Only)*

AS Argent Silver
AW Arctic White
BK Black
GL Grey Light
NW Neutral White

Step 4. Fabric Color Code *(Tackable Insert Only)*

A2035 Angora
A2053 Asteroid
A2047 Eucalyptus
A2084 Geranium
A2079 Graphite
A2691 Waterfall

Product Number	Description	Height		Width		Depth		Weight	
		in.	[mm]	in.	[mm]	in.	[mm]	lb.	[kg]
PRPM2924	Privacy panel	26	659	22 ½	572	½	11	10	4.7
PRPM2930	Privacy panel	26	659	28 ½	724	½	11	13	5.9
PRPM2936	Privacy panel	26	659	34 ½	876	½	11	16	7.1
PPT2924	Tackable insert	25 ¾	654	22 ¼	565	⅝	16	1	0.5
PPT2930	Tackable insert	25 ¾	654	28 ¼	718	⅝	16	1	0.6
PPT2936	Tackable insert	25 ¾	654	34 ¼	870	⅝	16	2	0.7

Rev 09.02.26

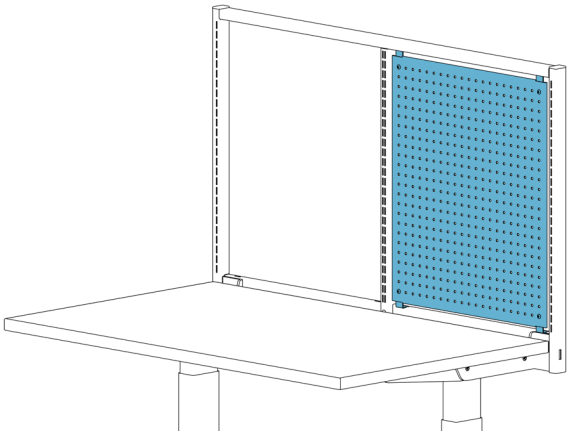

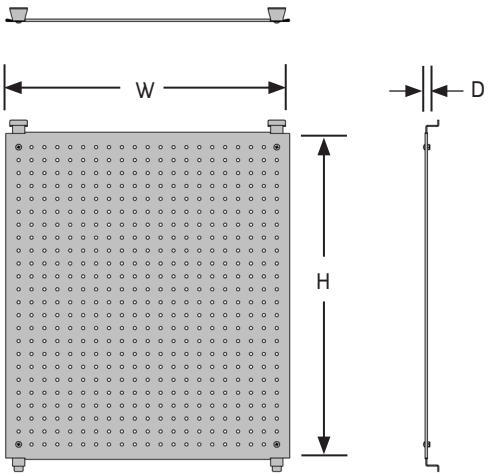

PEGBOARD

Pegboards provide for the display of tools and work aids in workstations. Pegboards are formed of steel and feature ¼" dimeter holes. They mount inside the Pro Riser Frames and painted any standard color.

How to Specify

Step 1. Product Number
PPB29

Step 2. Width
24 24" wide
30 30" wide
36 36" wide

Step 3. Paint Color Code
AS Argent Silver
AW Arctic White
BK Black
GL Grey Light
NW Neutral White

Product Number	Description	Height		Width		Depth		Weight	
		in.	[mm]	in.	[mm]	in.	[mm]	lb.	[kg]
PPB2924	Pegboard	25 ¼	641	22	559	1	25	10	4.5
PPB2930	Pegboard	25 ¼	641	28	711	1	25	13	5.7
PPB2936	Pegboard	25 ¼	641	34	864	1	25	16	6.9

Rev 08.19.26

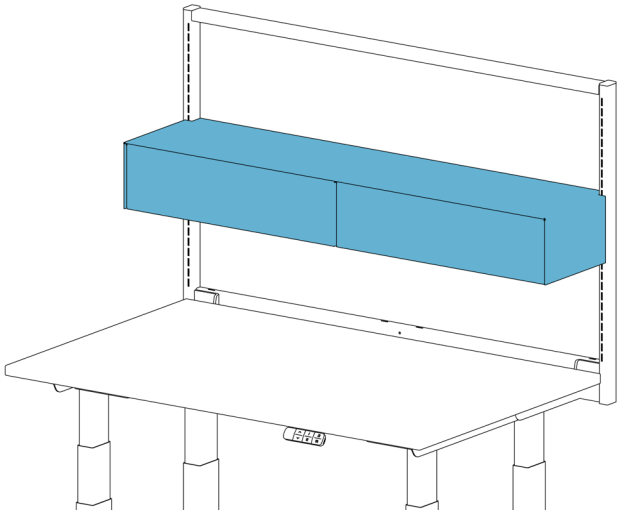

RISER FRAME DRAWERS

Riser Frame Drawer provide a two drawer unit finished on all sides, that attach to the Pro Riser Frame. Full extension slides allow full access to the drawers while the top can be used as shelf or monitor stand.

- Components that attach into the slots can be used in conjunction with the drawers- plug strips, monitor arms, and Slatwall and Bin Rails.
- Each Drawer can hold up to 15lbs. with a max capacity of the whole unit of 100lbs.

Note: when installed the Riser Spine will be removed, and White Boards Peg Boards, and Privacy Panels/Tackboards can NOT be installed.

Locking Units are available please contact factory.

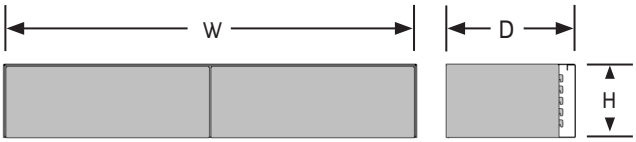

How to Specify

Step 1. Product Number

PRFD

Step 2. Product Depth

11 11" deep

Step 3. Product Witdth

48 48" wide

Step 4. Paint Color Code

AS	Argent Silver	**GL**	Grey Light
AW	Arctic White	**NW**	Neutral White
BK	Black		

Product Number	Description	Height		Width		Depth		Weight	
		in.	[mm]	in.	[mm]	in.	[mm]	lb.	[kg]
PRFD1148N	Pro Riser Frame Drawer 48" wide Non Locking	6.5	165	48	1219	11.5	292	46	21

Rev 09.08.26