SYMBIOTE

PRO CATALOG 2026



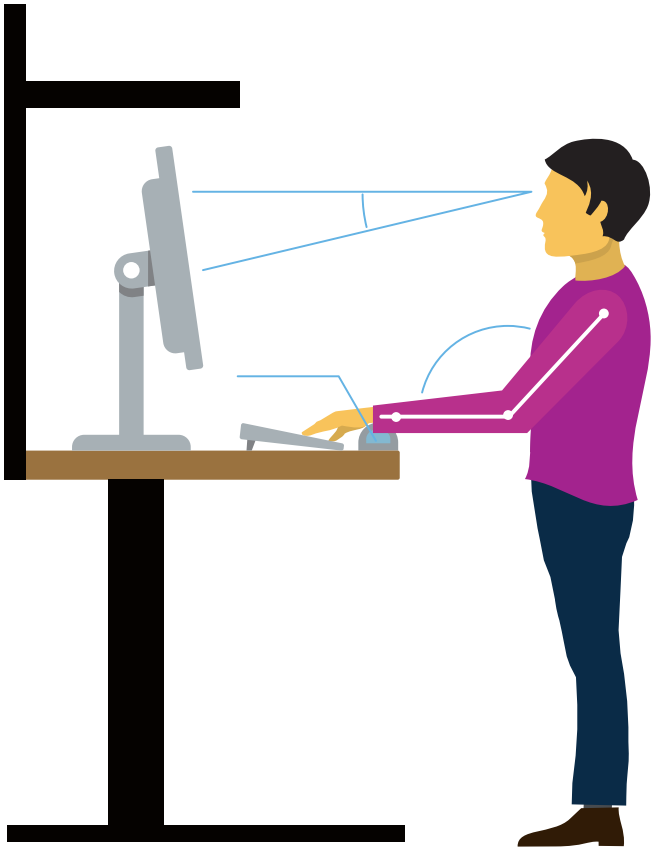

About the ErgoStat Pro

If you've ever seen our flagship ErgoStat, you'll recognize the height adjustable mechanism we pioneered in 1990.

So, when a customer asked us to build a product with a greater range of adjustability we applied the same design principles to the ErgoStat Pro.

The ErgoStat Pro has everything we like about our original ErgoStat – ergonomic positioning, overhead storage and built-in anti-collision technology – all working together to support people who perform lighter duty tasks. The optional battery power kit provides untethered freedom to work anywhere.

KEEP YOUR CATALOG CURRENT

This table, along with revision letters on page footers, indicate revised product descriptions, new products or eliminations.

Change Date	Pages	Description of Catalog Revision
06.26.25	1.4-1.5	Revised warranty and payment term details
01.14.25	1.2, 7.8	Removed Fabric Option Cement, Added Fabric Option Limestone
06.17.24	6.9	Removed SLV finish option from Modesty Panel
06.23.20	2.10-2.11	Added WorkTable Pro Electric Base
12.09.19	4.2-4.3; 5.2	Added 72" width to Multi-Function and Bookend Shelves; added 72" plug strip
10.01.19	6.3-6.6	Amended product name 6.3; Added Monitor Arm Set 6.4; Amended product name 6.5; Revised text 6.6
03.11.19	2.5-2.9; 4.7	Added 4-Legged Table, 4-Legged Table Riser Frame, 4-Legged Table Lower Shelf
10.09.18	1.4-1.6	Revised product warranty and contract terms
10.01.18	1.3, 3.2-3.3	Added laminate Ash Grey; discontinued Matrix; defined premium colors; added Work Surfaces
04.04.18	6.8, 6.9	Added Cable Tray and Modesty Panel
11.14.17	6.4, 6.6	Added Monitor Arm Add-On Post; Arm Mount Platform, Keyboard, Mouse Tray; and Notebook Holder

SECTION 1. HOW TO ORDER

Standard Paint Finish 1.2
Fabrics 1.2
Standard Laminate Finishes 1.3
Edge Band Options 1.3
Warranty and Contract Terms 1.4

SECTION 2. BASE AND RISER FRAME

Ergostat Pro Electric Base 2.2
Pro Riser Frame 2.4
4-Legged Table, Glides 2.5
4-Legged Table, Casters 2.7
4-Legged Table Riser Frame 2.9
WorkTable Pro Electric Base 2.10
FORTIS PRO ELECTRIC BASE 2.12
Touch Up Paint 2.13

SECTION 3. WORK SURFACES

Standard Work Surface 3.2
Corner Work Surface 3.3
Hardwood Work Surface 3.4
Auxiliary Work Surface 3.5

SECTION 4. SHELVING

Multi-Function Shelf 4.2
Bookend Shelf 4.3
Display Shelf 4.4
Shelf Add-on Lip 4.5
Lower Shelf 4.6
4-Legged Table Lower Shelf 4.7

SECTION 5. ELECTRICAL

Electric Plug Strip 5.2
High Output LED Lights 5.3

SECTION 6. COMPUTER ACCESSORIES

CPU Holder 6.2
Monitor Arms 6.3
Monitor Arms, Add-On Posts 6.4
Slatwall / Bin Rail 6.5
Monitor Arm, Slatwall Mount 6.5
Arm Mount Platform, Keyboard, Mouse Tray 6.6
Notebook Holder 6.6
Keyboard with Mouse Tray, Surface Mount 6.7
Cable Tray 6.8
Modesty Panel 6.9

SECTION 7. STORAGE / ACCESSORIES

Pedestal Drawers, Hanging 7.2
Pencil Drawer 7.3
Totes and Tote Bearers 7.4
Tote Holders, Surface Mount 7.5
Storage Bins 7.6
White Board 7.7
Privacy Panel / Tackable Insert 7.8
Pegboard 7.9
Riser Frame Drawers 7.10

About this Catalog

The Pro catalog contains typical product illustrations, context drawings and nominal dimensions. It is based on the latest information at publication date.

Symbiote reserves the right to make changes at any time, without notice, to finishes, materials and specifications and to discontinue finishes and products.

Quotes and Pricing

Symbiote quotes include product specifications with drawings and component parts. U.S. pricing is available from your sales representative or Symbiote.

Terminology and Product Features

The ErgoStat Pro is a height adjustable workstation with anti-collision technology. It is ideal for laboratory and technical office workers who perform lighter duty tasks. Modeled after Symbiote's original ErgoStat, it has the same ergonomic features and overhead storage—plus a new battery power kit.

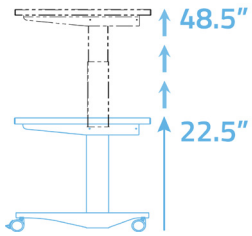

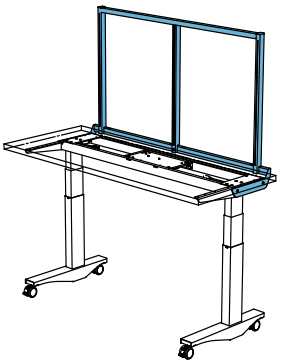

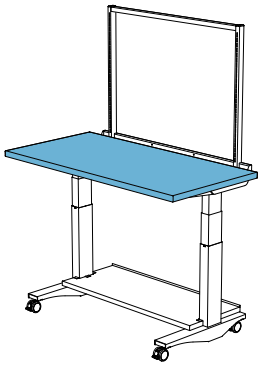

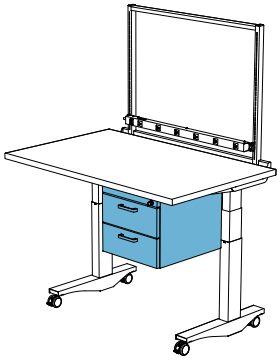

Adjustable Base
- 26-inch travel range.
- Electric base with glides or casters.
- Lifts 250 pounds, evenly distributed, with glides or casters.
- Built-in anti-collision technology.

Riser Frame + Spine
- Mount a Riser Frame - gain 29 inches of storage above surface.
- Accessories move up/down with you as frame is raised/lowered.
- Frame supports 200 pounds.
- Riser Spines divide frame into smaller sections.

Surfaces
- Add a 24-30-36 inch deep surface to construct a height adjustable bench.
- Surface widths: 36-48-60-72 inches.
- Laminate and mixed hardwood.
- Matching or contrasting edges.

Accessories
- Organize the ErgoStat Pro with a battery kit, shelves, lighting, monitor arms, plug strips, pegboards, etc.
- Add a footrest, drawer, hanging ped or lower shelf below the surface.

SECTION 1. HOW TO ORDER

Standard Paint Finish 1.2
Fabrics 1.2
Standard Laminate Finishes 1.3
Edge Band Options 1.3
Warranty and Contract Terms 1.4



STANDARD PAINT FINISH

High-efficiency powder paint system produces a consistent coverage and finish. This supports Symbiote's sustainable practices, producing no VOCs and hazardous emissions. Finishes are checked to guarantee quality and color validity.

Leg and Stretcher

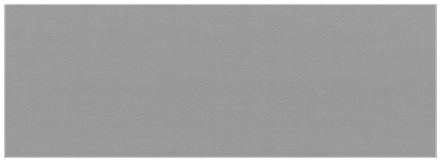
Argent Silver **AS**

Arctic White **AW**


Black **BK**

Foot and Accessories

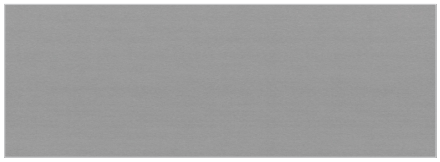
Argent Silver **AS**

Arctic White **AW**


Black **BK**


Grey Light **GL**

Neutral White **NW**

FABRICS

Fabrics for panels and tackboards is a program in alliance with Gilford of Maine. Customer own material (COM) available.

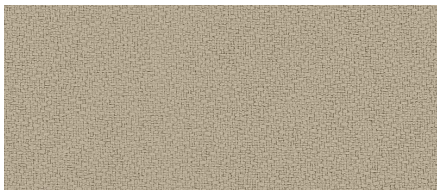
Angora **A2035**

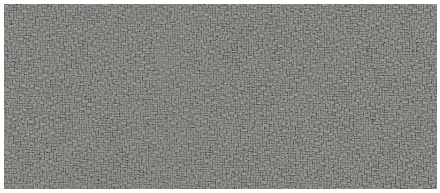
Asteroid **A2053**

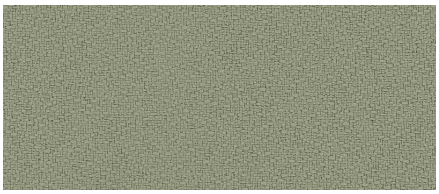
Eucalyptus **A2047**

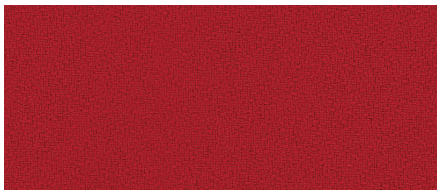
Geranium **A2084**

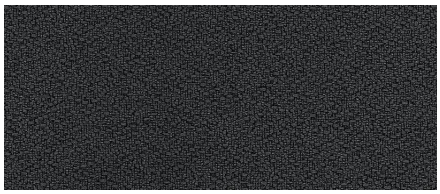
Graphite **A2079**

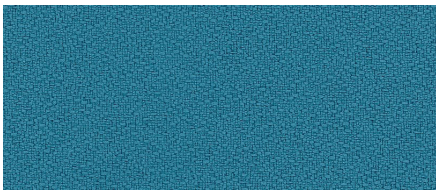
Waterfall **A2691**

Online or printed samples vary depending on your monitor and printer. To request an actual sample please contact your sales representative.

STANDARD LAMINATE FINISHES


Black **BK**


Grey Light **GL**

Neutral White **NW**

PREMIUM LAMINATE FINISHES - CONSULT FACTORY

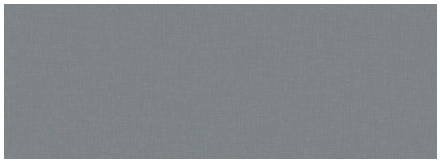
Ash Grey **AH**

Arctic White **AW**


Chai Grain **CG**


Driftwood **DF**


Espresso Grain **EG**


Mocha Grain **MG**


Silver Oak Ply **SP**


Weathered Wood **WW**

EDGE BAND OPTIONS

Arctic White **AW**


Argent Silver **AS**


Black **BK**


Brown **BR**


Grey Light **GL**

Neutral White **NW**


Shadow **SH**

Online or printed samples vary depending on your monitor and printer. To request an actual sample please contact your sales representative.

WARRANTY AND CONTRACT TERMS

LIMITED WARRANTY

SYMBIOTE, INC., a Michigan corporation ("Symbiote") warrants its standard and non-standard products to be free of defects in material and workmanship from the date of initial delivery for the applicable warranty period specified below. This warranty is made by Symbiote to the original purchaser ("Purchaser") acquiring the product for its own use, and not for resale, directly from Symbiote or its authorized dealer or distributor. This warranty is not transferable. "Standard products" are those items offered in any Symbiote catalog published on Symbiote's website as in effect on the date of sale. "Non-standard products" are products that are sold by Symbiote but are not offered in Symbiote's catalog, including custom and alternative products. Lamps and other consumables are not considered standard or non-standard products and are excluded from this warranty.

Warranty Periods

The warranty periods applicable to Symbiote's products under this Warranty are as follows:

- 15 years, Seating, unlimited on the pneumatic cylinder
- 12 years, Standard Products
- 5 years, Electric Height Adjustable Tables
- 2 years, Task Lighting
- 1 year, ESD Laminate
- 1 year, Special / Custom Product

Pass-Through Products - manufacturer's warranty

Exclusive Remedies

If during the first year of the applicable warranty period Purchaser notifies Symbiote in writing of an alleged product defect covered by this warranty, and if Symbiote confirms the product is defective, then as Purchaser's exclusive remedy Symbiote will repair or replace the defective product, at Symbiote's option and expense, including labor and materials, F.O.B. Symbiote's plant. If during the remainder of the applicable warranty period (that is, after year one) Purchaser notifies Symbiote in writing of an alleged product defect covered by this warranty, and if Symbiote confirms the product is defective, then as Purchaser's exclusive remedy Symbiote will furnish Purchaser with parts and materials (but not labor) necessary to repair the defect, F.O.B. Symbiote's plant. Symbiote will determine whether to require Purchaser to return defective product to Symbiote. If such a return is required, Purchaser will return the defective product to Symbiote's plant with all costs prepaid by Purchaser. Repaired or replaced product will be returned to Purchaser at Symbiote's expense. Symbiote may require Purchaser to establish the product was installed and used according to Symbiote's published instructions and is within the applicable warranty period by producing invoices or such other evidence as Symbiote may reasonably request.

Limitations and Exclusions

Symbiote has no obligation to make repairs, replacements or corrections that are required, in whole or in part, as the result of (i) failure to install and use product in accordance with Symbiote's published instructions and notes appearing on customer sign-off drawings provided to Purchaser, (ii) accident, disaster or force majeure, (iii) abuse, neglect, misuse, fault or negligence of persons other than Symbiote, including without limitation any installer engaged by Symbiote's dealer, distributor or representative (iv) exposure of product to extreme environmental conditions, (v) improper handling or storage of product, (vi) normal wear and tear, (vii) use of product in combination with equipment, components, replacement parts or software not supplied by Symbiote, (viii) alterations, repairs or installations of product that have not been performed by Symbiote or a person Symbiote has expressly authorized to perform the same on Symbiote's behalf as its employee or agent, (ix) the use of non-standard materials selected by, provided by or used at the express request of Purchaser, or (x) design defects in product. Because of natural variations over which Symbiote has no control, Symbiote does not warrant matching of color, grain or texture of materials or finishes. This warranty applies only to products manufactured by Symbiote. Notwithstanding any contrary provision in this warranty, components purchased and resold without further processing by Symbiote are not covered by this warranty, but Symbiote will pass on to Purchaser whatever warranty Symbiote receives from the manufacturer of such goods.

EXCEPT AS STATED ABOVE, SYMBIOTE DOES NOT MAKE A WARRANTY AS TO ANY PRODUCT OR GOODS AND, IN PARTICULAR, DOES NOT MAKE A WARRANTY OF MERCHANTABILITY OR OF FITNESS FOR A PARTICULAR PURPOSE. Product repair or replacement, at Symbiote's option, in accordance with this warranty, is Purchaser's exclusive remedy for a product defect. Symbiote has no tort liability with respect to a product. Symbiote is not liable for any consequential, economic, indirect, special, punitive

WARRANTY AND CONTRACT TERMS, continued

or incidental damages arising from a product defect. No dealer, distributor, reseller or sales representative of Symbiote's products is authorized to bind Symbiote to any warranty or representation except as stated above.

CONTRACT TERMS

All quotations, proposals, or similar communications from Symbiote are considered "invitations to contract." Any order placed by a customer must be in the form of a written purchase order and shall be considered an "offer." A written acknowledgment of an order by Symbiote shall be considered an "acceptance" which, when mailed, emailed or faxed to the customer, shall then result in a binding sales contract of which these Contract Terms shall be a part. Acceptances may be made only at Symbiote's home office in Zeeland, Michigan, and all sales contracts shall be made pursuant to and controlled by the laws of the State of Michigan. Notwithstanding any inconsistent or contrary term which may appear on a customer's purchase order, Symbiote's products are sold only upon these Contract Terms.

Prices

Published pricing is U. S. dollars. Unless otherwise stated in Symbiote's acknowledgment, all prices are F.O.B. Symbiote's factory, Zeeland, Michigan, or F.O.B. Symbiote's supplier or fulfillment location, as applicable, and do not include freight, storage, handling, uncrating or installation charges. Upon request Symbiote will provide estimated freight charges F.O.B. destination. Prices do not include sales, use, excise or any other taxes or assessments which may be applicable to the sale. Symbiote reserves the right to make changes in pricing without notice.

Ordering Information

A minimum Deposit of 35% is required on all orders placed with SYMBIOTE, INC. for orders with a quoted list price of $50,000 and higher. For orders above $250,000 further discussions on the deposit amount will be needed, unless an active contract governing down payment is currently in place. Deposit is due at the time of order entry unless written consent is agreed upon in advance. Payment can be made via standard check or through ACH payment, information available upon request. All orders must be in writing to avoid error and/or duplication. Order all products by their complete product number. Specify quantity, product number, product description, finish option and any other specifying information requested. Submit orders via email, conventional mail or fax on your purchase order form. Acknowledgments are issued within five working days of acceptance of the order with an approximate ship date of the product ordered.

Taxes

In addition to the purchase price, the customer is liable for all sales, use and excise taxes and/or other governmental charges imposed in respect of the sale, delivery or installation of the products being purchased by the customer (except taxes on or measured by net income of Symbiote), including those which Symbiote may be required to pay, except where the law otherwise provides. Unless otherwise specified in Symbiote's acknowledgment, the customer shall pay all such taxes directly to the appropriate taxing authorities.

Payment

The payment terms contained in this paragraph apply only to customers whose credit has been approved by Symbiote. For purchases of standard products, Symbiote offers a one percent (1%) discount off the purchase price (excluding charges for freight, storage, handling, uncrating, installation and taxes) for full payments made in readily available funds (and not by credit card), within ten (10) days after the invoice date. All payments are due within thirty (30) days after the invoice date. For purchases of non-standard products, payment terms are fifty percent (50%) of the total purchase price deposited with the order in readily available funds and the total remaining purchase price ("Deferred Price") payable in readily available funds within thirty (30) days after the invoice date ("Final Invoice Date"). However, if the customer pays the entire Deferred Price and other amounts owing with respect to the non-standard products in readily available funds (and not by credit card) within ten (10) days after the Final Invoice Date, customer will be credited with a discount equal to one percent (1%) of the Deferred Price (excluding charges for freight, storage, handling, uncrating, installation and taxes). Beginning thirty (30) days after the invoice date, the customer shall pay a late payment charge of one and one-half percent (1.5%) per month on any unpaid portion of the purchase price shown on the invoice. Visa, MasterCard, American Express and Discover credit cards are accepted but are not considered "readily available funds" for purpose of the discounts described above. Credit card fees may apply. Symbiote reserves the right to revoke or modify these credit terms at any time.

WARRANTY AND CONTRACT TERMS, continued

Retention of Title; Security Interest

Symbiote shall retain title to the products, any replacements thereof, and any additions thereto, for purpose of securing payment of the purchase price and related charges. Title shall not pass to the customer until the purchase price and all sums due hereunder are fully paid. Symbiote is authorized to file a financing statement and other documents necessary to enable Symbiote to place third parties on notice of its title to the products.

Shipment

Freight bills for orders shipped F.O.B. Zeeland, MI, or F.O.B. Symbiote's supplier or fulfillment location will be directly sent from the carrier to Purchaser for direct payment by Purchaser. Orders shipped F.O.B destination have freight included in the invoice. Special shipping costs, if specified by Purchaser, are the responsibility of Purchaser. Any shipping date shown on the acknowledgment represents Symbiote's best estimate as of the date of acknowledgment. However, Symbiote shall not incur any liability of any kind for failure to ship on any particular date unless a firm shipping date has been expressly agreed to by an officer of Symbiote in a separately signed written instrument. Responsibility for the product and risk of loss shall pass to Purchaser when the product is placed in the possession of a common carrier. Claims against the carrier shall be the responsibility of Purchaser. Claims against Symbiote for apparent defects, errors or shortages must be made in writing to Symbiote within thirty (30) days of receipt of the product, or such claims shall be considered waived and the product accepted as delivered. If Purchaser claims the product delivered is non-conforming, Purchaser shall afford Symbiote prompt and reasonable opportunity to inspect the product. Symbiote's liability for non-conforming product shall be limited to repair or replacement of such product or allowance of credit for such product, at Symbiote's option. If Symbiote and the customer are unable to reach settlement of any claim relating to product, the customer must institute legal action against Symbiote within one (1) year after such claim arises and thereafter all such claims shall be barred, notwithstanding any statutory period of limitations to the contrary.

Selection of Goods

The selection of particular models, styles, colors, fabrics and specifications of product and the suitability thereof for the customer's specific application are the sole responsibility of the customer.

Delays and Change Orders

After the date an order from the customer is acknowledged by Symbiote, the customer may not change the order, in whole or in part, without Symbiote's written approval. All changes must be requested in writing. Where a proposed change would necessitate delays in shipment, Symbiote may condition its approval upon a price change to reflect Symbiote's prevailing prices at the time of such delayed shipment. Orders for non-standard products, including without limitation products with nonstandard finishes, are not subject to change.

Symbiote is not responsible for delays in shipment due to customer-requested changes to an order.

Storage

If the customer requests a delay in shipment after the product has become work in process, Symbiote may place the finished product in storage at the customer's risk and expense, and transfer to storage shall be considered delivery for all purposes, including invoicing and payment.

Cancellation

After the date an order from the customer is acknowledged by Symbiote, the customer may not cancel the order without Symbiote's written approval. All cancellations must be requested in writing. Symbiote's approval of cancellation shall be conditioned on the customer's payment of a cancellation charge of fifteen percent (15%) of the total purchase price and reimbursement of costs incurred by Symbiote prior to such approval, including engineering, testing, material costs, labor and burden and similar expenses in connection with the order cancelled. Orders for non-standard products, including without limitation products with nonstandard finishes, are not subject to cancellation.

Returns

The customer may not return product without Symbiote's written approval. Returns must be requested within 90 days of the original shipment. Symbiote's approval of returns shall be conditioned on the product being returned to Symbiote (i) in compliance with Symbiote's shipping instructions, (ii) within 90 days of the issuance of Symbiote's RGA (Returned Goods Authorization) number, (iii) with all

WARRANTY AND CONTRACT TERMS, continued

return shipping charges being prepaid by customer, (iv) in a suitable condition for resale, and (v) with the customer's payment of a restocking charge of fifteen percent (15%) of the total purchase price. Symbiote will charge the customer for repairs to returned product at customary rates. Non-standard products, including without limitation, products with nonstandard finishes, are not subject to return.

Damage Limitation

The liability of Symbiote arising out of the sale or use of the product, whether based on negligence, breach of contract, strict liability or otherwise, shall not in any event exceed the original purchase price of the product. Under no circumstances shall Symbiote be liable for any lost profits or any incidental or consequential damages of any kind with respect to its products or the transactions by which its products are sold.

Excuse

In no event shall Symbiote be liable for any loss or damage resulting from any delay or failure in shipment or other failure to perform with respect to the products where such delay, failure, loss or damage is the proximate result of any act of any governmental authority, revolution, riot, civil disorder or disturbance, act of enemies, delay or default in transportation, strike, dispute among or between labor unions or other labor disputes, inability to obtain materials or facilities from normal sources, fire, flood, act of God or any cause not within the reasonable control of Symbiote, whether of the class of causes enumerated or otherwise. Without limiting the generality of the foregoing, Symbiote may, without causing a breach or incurring liability, allocate products which are in short supply for any reason among customers in any manner which Symbiote in its sole discretion considers advisable.

Modification

These contract terms can be modified only by a written instrument signed by Symbiote.

Infringement

If any product sold by Symbiote is to be manufactured according to the customer's specifications, the customer shall indemnify Symbiote against any claims or liability for patent or trademark infringement on account of such manufacture.

this page left
BLANK

SECTION 2. BASE AND RISER FRAME

Ergostat Pro Electric Base 2.2
Pro Riser Frame 2.4
4-Legged Table, Glides 2.5
4-Legged Table, Casters 2.7
4-Legged Table Riser Frame 2.9
WorkTable Pro Electric Base 2.10
Fortis Pro Electric Base 2.12
Touch Up Paint 2.13

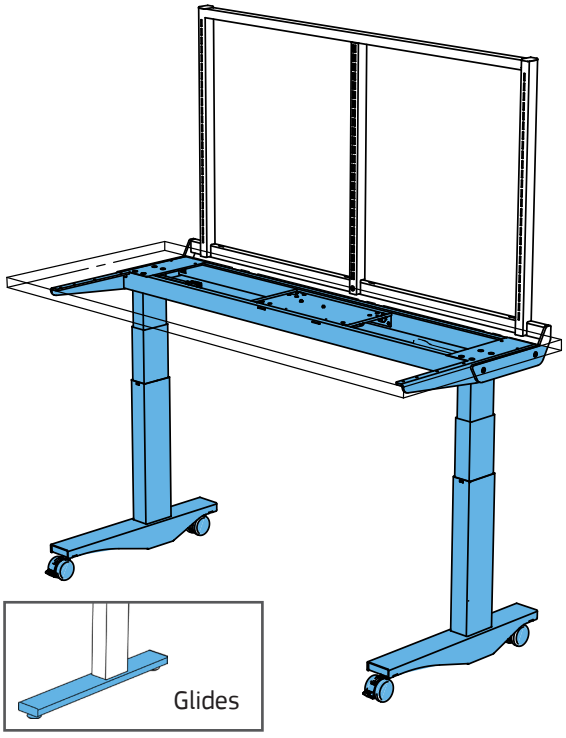

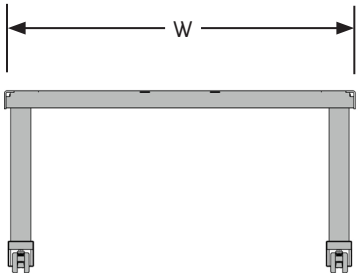

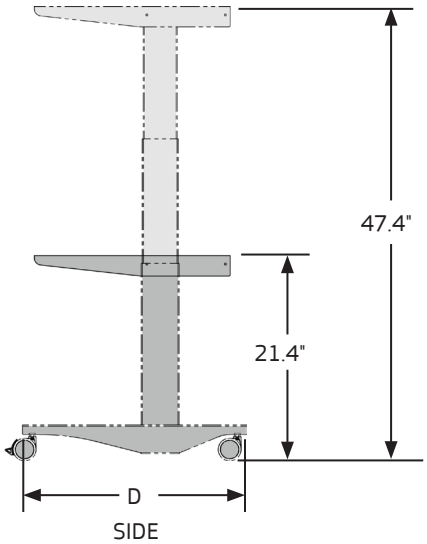

ERGOSTAT PRO ELECTRIC BASE

Available in widths up to 72 inches, the ErgoStat Pro electric base has built-in anti-collision technology with a dynamic load capacity of 250 pounds evenly distributed. The base rises 1½" per second and has an approved UL962 drive system with a 10% duty cycle. Meets BIFMA X5.5-2014 with work surface and Riser Frame. Includes a 9½' power cord and a standard hand control switch. Ships knocked down.

To build a workstation add a Riser Frame and work surface, both sold separately. Riser Frame attaches to the base, adding upright support for hanging components. Available with casters or glides.

- Travel range 26 inches: 22.5 to 48.5" from top of surface.
- Riser Frames cannot be used with 36" deep work surfaces.
- Optional rechargeable battery pack for a mobile "power cord free" workstation; order PEBPK separately.
- Optional synchronization and ganging kit available; order PSYK separately. Up to four ErgoStat Pro bases can be synchronized together; one PSYK needed per base joint.

How to Specify

Step 1. Product Number

PERC Caster Base
PERG Glide Base

Step 2. Depth

24 24" deep **30** 30" deep

Step 3. Width

36 36" wide **42** 42" wide **48** 48" wide
60 60" wide **72** 72" wide

Step 4. Switch Style

J Rocker Switch (standard)
C Rocker Switch, 3-memory settings, digital display (upcharge)
K Rocker Switch, 3-memory settings (upcharge)



DPFIK
"J" switch (standard)



DPFIC
"C" switch (upcharge)



DPFIM
"K" switch (upcharge)

To substitute the "C" or "K" switch for the standard "J" switch:

1. Deduct the list price for the DPFIK ("J" switch) from the ErgoStat Pro Base list price.
2. Add the list price of the new switch to the ErgoStat Pro Base list price. ***Example***: To substitute "K" switch on the ErgoStat Pro Base with casters, part# PERC2436J becomes PERC2436K.

ERGOSTAT PRO ELECTRIC BASE *(Cont'd)*

Step 5. Select a color code for the Legs, Feet and Casters: **(select one of each)**

LEG AND STRETCHER		FOOT		CASTER / GLIDE*	
AS	Argent Silver	**AS**	Argent Silver	**AS**	Silver with Dark Grey Tread
AW	Arctic White	**AW**	Arctic White	**AW**	White with Dark Grey Tread
BK	Black	**BK**	Black	**BK**	Black
		GL	Grey Light		
		NW	Neutral White	*Glide is black only	

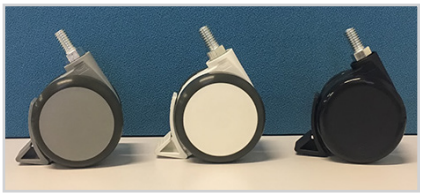

ErgoStat Pro Base Specification Breakdown (example)

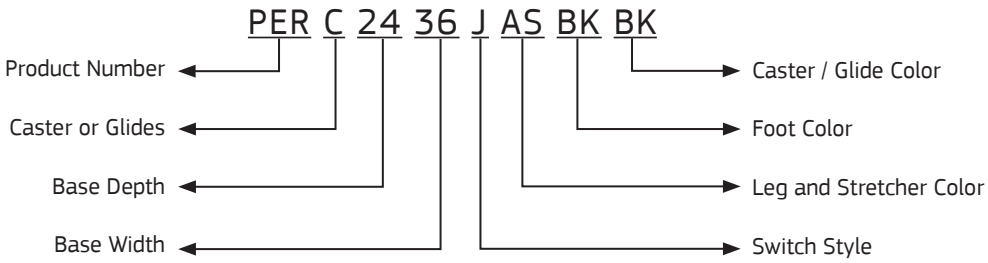

Product Number	Description	Width		Depth		Weight	
		in.	[mm]	in.	[mm]	lb.	[kg]
PERC2436	Casters	29 5/8	746	23 3/8	592	57	26.0
PERC2442	Casters	35 5/8	898	23 3/8	592	59	26.6
PERC2448	Casters	41 3/8	1051	23 3/8	592	60	27.2
PERC2460	Casters	53 3/8	1361	23 3/8	592	63	28.4
PERC2472	Casters	65 3/8	1660	23 3/8	592	65	29.5
PERC3036	Casters	29 5/8	746	29 3/8	744	59	26.9
PERC3042	Casters	35 5/8	898	29 3/8	744	61	27.4
PERC3048	Casters	41 3/8	1051	29 3/8	744	62	28.0
PERC3060	Casters	53 3/8	1361	29 3/8	744	64	29.2
PERC3072	Casters	65 3/8	1660	29 3/8	744	67	30.3
PERG2436	Glides	29 5/8	746	23 5/8	600	59	26.9
PERG2442	Glides	35 5/8	898	23 5/8	600	61	27.5
PERG2448	Glides	41 3/8	1051	23 5/8	600	62	28.1
PERG2460	Glides	53 3/8	1361	23 5/8	600	64	29.2
PERG2472	Glides	65 3/8	1660	23 5/8	600	67	30.4
PERG3036	Glides	29 5/8	746	29 5/8	752	62	28.3
PERG3042	Glides	35 5/8	898	29 5/8	752	64	28.9
PERG3048	Glides	41 3/8	1051	29 5/8	752	65	29.5
PERG3060	Glides	53 3/8	1361	29 5/8	752	68	30.6
PERG3072	Glides	65 3/8	1660	29 5/8	752	70	31.8
PEBPK	Battery pack	8 1/4	210	3	76	1	0.5
PSYK	Synchronization and ganging kit	3	76	-	-	1	0.5

Rev 07.10.26

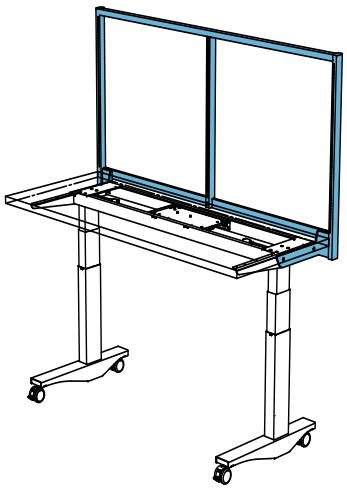

FULL WIDTH FRAME

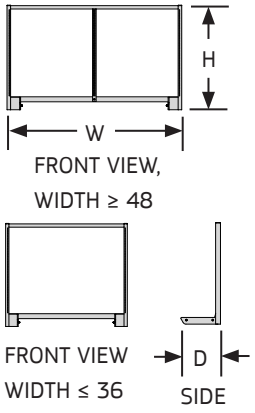

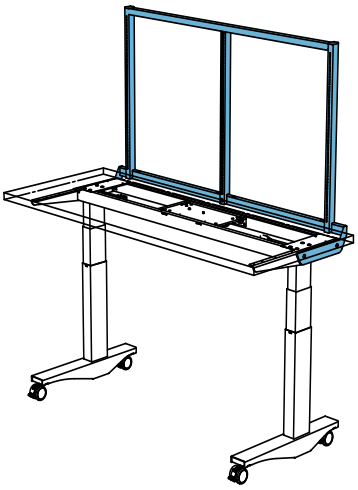

UNDERSIZE FRAME

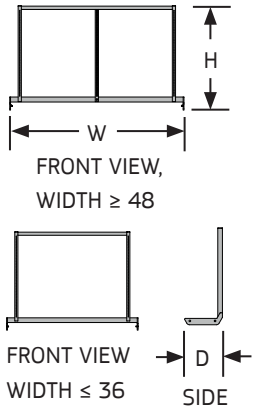

PRO RISER FRAME

Open frame design with undersize and full width options provides upright support for hanging components. Riser Frame bolts to the ErgoStat and Fortis Pro bases and adjusts with the base. Frame allows vertical adjustment of components in one inch increments. Riser Frame extends 28 inches above top of surface.

- Riser Frames ≥ 48" include a frame spine which divides the Riser Frame into two smaller, equal sections.
- Load capacity is 200 pounds evenly distributed.

How to Specify

Step 1. Product Number

PRF29F Full
PRF29U Undersize

Step 2. Width

Full Width		Undersize Width	
36	36" wide	**24**	24" wide
48	48" wide	**30**	30" wide
60	60" wide	**36**	36" wide
72	72" wide	**48**	48" wide
		60	60" wide

Step 3. Paint Color Code

AS	Argent Silver	**GL**	Grey Light
AW	Arctic White	**NW**	Neutral White
BK	Black		

Product Number	Description	Height		Width		Depth		Weight	
		in.	[mm]	in.	[mm]	in.	[mm]	lb.	[kg]
PRF29F36	36" wide components, 36" base mount, full	31 ⅜	797	37	940	12 ¼	311	18	8.2
PRF29F48	48" wide components, 48" base mount, full	31 ⅜	797	49	1245	12 ¼	311	23	10.4
PRF29F60	60" wide components, 60" base mount, full	31 ⅜	797	61	1549	12 ¼	311	25	11.3
PRF29F72	72" wide components, 72" base mount, full	31 ⅜	797	73	1854	12 ¼	311	27	12.2
PRF29U24	24" wide components, 36" base mount, undersize	31 ⅜	797	30	762	12 ¼	311	14	6.4
PRF29U30	30" wide components, 42" base mount, undersize	31 ⅜	797	36	914	12 ¼	311	15	6.8
PRF29U36	36" wide components, 48" base mount, undersize	31 ⅜	797	42	1067	12 ¼	311	16	7.3
PRF29U48	48" wide components, 60" base mount, undersize	31 ⅜	797	54	1372	12 ¼	311	21	9.5
PRF29U60	60" wide components, 72" base mount, undersize	31 ⅜	797	66	1676	12 ¼	311	23	10.4

Rev 07.10.26

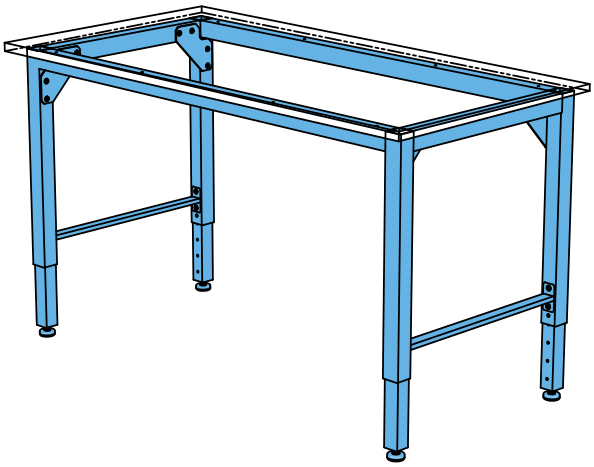

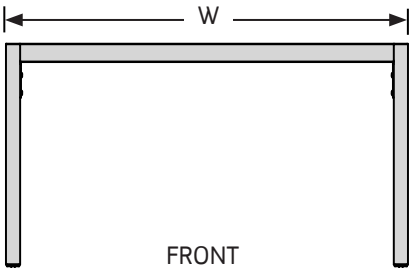

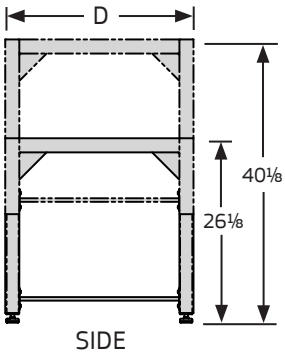

4-LEGGED TABLE, GLIDES

Table has leveling glides and a 14" travel range measuring 26⅛" to 40⅛" from the floor to the bottom of the work surface. Adjusts in 1" increments with threaded fasteners. Heavy-duty welded steel front and back frame construction. Lower side leg cross-bar for added strength and stability. Ships knocked down and is easily assembled with gusset plates.

- Use with Standard Work Surfaces, sold separately (see Section 3), to construct a height adjustable table. Surfaces are not pre-drilled for these bases.
- Optional Lower Shelf available; see Section 4.
- Load capacity 1,500 lbs. evenly distributed.
- Travel range is measured from floor to bottom of surface.

How to Specify

Step 1. Product Number

FLPG

Step 2. Depth

24	24" deep	**30**	30" deep	**36**	36" deep
42	42" deep	**48**	48" deep		

Step 3. Width

36	36" wide	**48**	48" wide	**60**	60" wide
72	72" wide	**96**	96" wide		

Step 4. Paint Color Code

AS	Argent Silver
AW	Arctic White
BK	Black
GL	Grey Light
NW	Neutral White

Product Number	Description	Width		Depth		Weight	
		in.	[mm]	in.	[mm]	lb.	[kg]
FLPG2436	Glides	32 ¾	832	20 ¾	527	54	24.5
FLPG2448	Glides	44 ¾	1137	20 ¾	527	59	26.8
FLPG2460	Glides	56 ¾	1441	20 ¾	527	63	28.6
FLPG2472	Glides	68 ¾	1746	20 ¾	527	67	30.4
FLPG2496	Glides	92 ¾	2356	20 ¾	527	75	34.0

Cont'd

4-LEGGED TABLE, GLIDES *(Cont'd)*

Product Number	Description	Width		Depth		Weight	
		in.	[mm]	in.	[mm]	lb.	[kg]
FLPG3036	Glides	32 ¾	832	26 ¾	679	56	25.4
FLPG3048	Glides	44 ¾	1137	26 ¾	679	61	27.7
FLPG3060	Glides	56 ¾	1441	26 ¾	679	66	29.9
FLPG3072	Glides	68 ¾	1746	26 ¾	679	70	31.8
FLPG3096	Glides	92 ¾	2356	26 ¾	679	78	35.4
FLPG3636	Glides	32 ¾	832	32 ¾	832	60	27.2
FLPG3648	Glides	44 ¾	1137	32 ¾	832	64	29.0
FLPG3660	Glides	56 ¾	1441	32 ¾	832	68	30.8
FLPG3672	Glides	68 ¾	1746	32 ¾	832	72	32.7
FLPG3696	Glides	92 ¾	2356	32 ¾	832	81	36.7
FLPG4248	Glides	44 ¾	1137	38 ¾	984	68	30.8
FLPG4260	Glides	56 ¾	1441	38 ¾	984	74	33.6
FLPG4272	Glides	68 ¾	1746	38 ¾	984	79	35.8
FLPG4296	Glides	92 ¾	2356	38 ¾	984	84	38.1
FLPG4848	Glides	44 ¾	1137	44 ¾	1137	71	32.2
FLPG4860	Glides	56 ¾	1441	44 ¾	1137	75	34.0
FLPG4872	Glides	68 ¾	1746	44 ¾	1137	81	36.7
FLPG4896	Glides	92 ¾	2356	44 ¾	1137	87	39.5

Rev 11.23.26

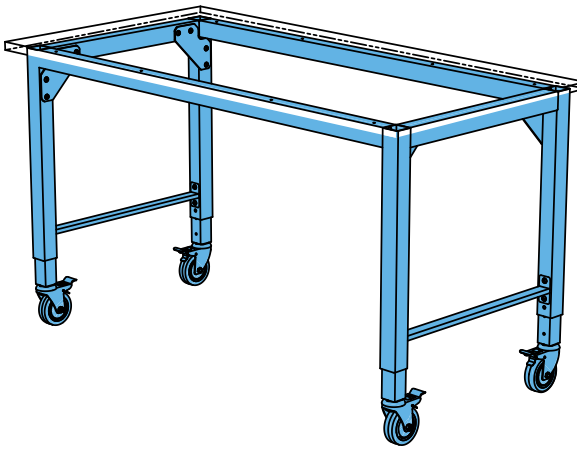

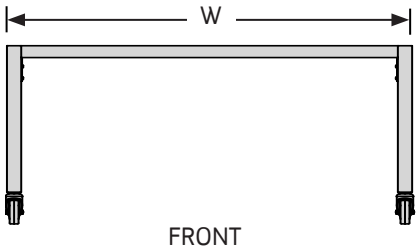

FRONT

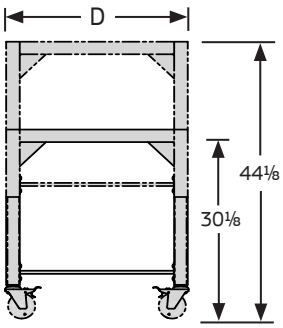

SIDE

4-LEGGED TABLE, CASTERS

Table with totalock casters has a 14" travel range measuring 30⅛" to 44⅛" from floor to bottom of work surface. Adjusts in 1" increments with threaded fasteners. Heavy-duty welded steel front and back frame construction. Lower side leg cross-bar for added strength and stability. Ships knocked down and is easily assembled with gusset plates.

- Use with Standard Work Surfaces, sold separately (see Section 3), to construct a height adjustable table. Surfaces are not pre-drilled for these bases.
- Optional Lower Shelf available; see Section 4.
- Load capacity 1,500 lbs. evenly distributed.
- Travel range is measured from floor to bottom of surface.

How to Specify

Step 1. Product Number

FLPC

Step 2. Depth

24	24" deep	**30**	30" deep	**36**	36" deep
42	42" deep	**48**	48" deep		

Step 3. Width

36	36" wide	**48**	48" wide	**60**	60" wide
72	72" wide	**96**	96" wide		

Step 4. Paint Color Code

AS	Argent Silver
AW	Arctic White
BK	Black
GL	Grey Light
NW	Neutral White

Product Number	Description	Width		Depth		Weight	
		in.	[mm]	in.	[mm]	lb.	[kg]
FLPC2436	Casters	32 ¾	832	20 ¾	527	61	27.7
FLPC2448	Casters	44 ¾	1137	20 ¾	527	65	29.5
FLPC2460	Casters	56 ¾	1441	20 ¾	527	69	31.3
FLPC2472	Casters	68 ¾	1746	20 ¾	527	73	33.1
FLPC2496	Casters	92 ¾	2356	20 ¾	527	81	36.7

Cont'd

4-LEGGED TABLE, CASTERS *(Cont'd)*

Product Number	Description	Width		Depth		Weight	
		in.	[mm]	in.	[mm]	lb.	[kg]
FLPC3036	Casters	32 ¾	832	26 ¾	679	63	29.0
FLPC3048	Casters	44 ¾	1137	26 ¾	679	67	30.4
FLPC3060	Casters	56 ¾	1441	26 ¾	679	72	32.7
FLPC3072	Casters	68 ¾	1746	26 ¾	679	76	34.5
FLPC3096	Casters	92 ¾	2356	26 ¾	679	84	38.1
FLPC3636	Casters	32 ¾	832	32 ¾	832	66	29.9
FLPC3648	Casters	44 ¾	1137	32 ¾	832	70	31.8
FLPC3660	Casters	56 ¾	1441	32 ¾	832	74	33.6
FLPC3672	Casters	68 ¾	1746	32 ¾	832	78	35.4
FLPC3696	Casters	92 ¾	2356	32 ¾	832	87	39.5
FLPG4248	Casters	44 ¾	1137	38 ¾	984	71	32.2
FLPC4260	Casters	56 ¾	1441	38 ¾	984	78	35.4
FLPC4272	Casters	68 ¾	1746	38 ¾	984	83	37.6
FLPC4296	Casters	92 ¾	2356	38 ¾	984	88	39.9
FLPC4848	Casters	44 ¾	1137	44 ¾	1137	74	33.6
FLPC4860	Casters	56 ¾	1441	44 ¾	1137	79	35.8
FLPC4872	Casters	68 ¾	1746	44 ¾	1137	85	38.6
FLPC4896	Casters	92 ¾	2356	44 ¾	1137	91	41.3

Rev 11.23.26

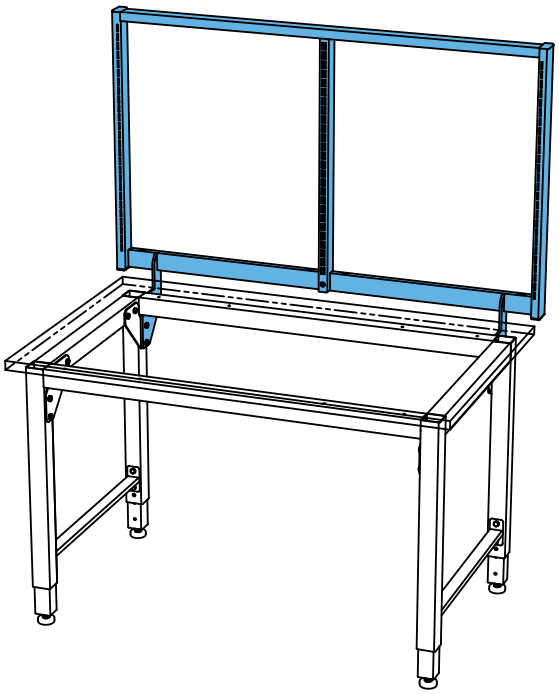

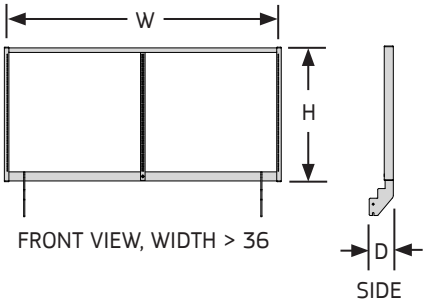

FRONT VIEW, WIDTH > 36
SIDE

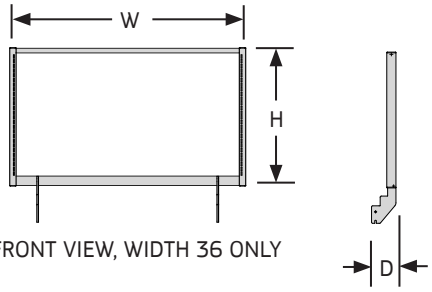

FRONT VIEW, WIDTH 36 ONLY
SIDE

4-LEGGED TABLE RISER FRAME

Open frame design provides upright support for hanging components. Riser Frame bolts to the 4-Legged Table base and adjusts with the base. Frame allows vertical adjustment of components in one inch increments.

- The 48, 60, 72 and 96-inch Riser Frames include a frame spine which divides the Riser Frame into two smaller, equal sections.
- Load capacity is 200 pounds evenly distributed.

How to Specify

Step 1. Product Number

PRF4L29

Step 2. Width

36 36" wide
48 48" wide
60 60" wide
72 72" wide
96 96" wide

Step 3. Paint Color Code

AS Argent Silver
AW Arctic White
BK Black
GL Grey Light
NW Neutral White

Product Number	Description	Height		Width		Depth		Weight	
		in.	[mm]	in.	[mm]	in.	[mm]	lb.	[kg]
PRF4L2936	Riser frame	29 ⅝	752	37	940	5 ⅓	135	20	9
PRF4L2948	Riser frame	29 ⅝	752	49	1245	5 ⅓	135	27	12
PRF4L2960	Riser frame	29 ⅝	752	61	1549	5 ⅓	135	30	13
PRF4L2972	Riser frame	29 ⅝	752	73	1854	5 ⅓	135	33	15
PRF4L2996	Riser frame	29 ⅝	752	97	2464	5 ⅓	135	39	18

Rev 07.10.26

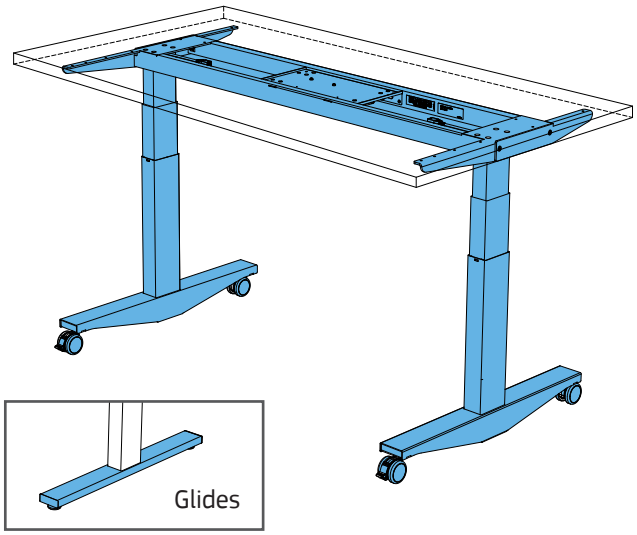

WORKTABLE PRO ELECTRIC BASE

Available in widths up to 72 inches, the WorkTable Pro electric base has built-in anti-collision technology with a dynamic load capacity of 250 pounds evenly distributed. The base rises 1½" per second and has an approved UL962 drive system with a 10% duty cycle. Meets BIFMA X5.5-2014 with work surface. Available with casters or glides. Ships knocked down.

- Travel range 26 inches: 22.5 to 48.5" from top of surface.
- Includes a 9½' power cord and a standard hand control switch.
- Optional rechargeable battery pack for a mobile "power cord free" workstation; order PEBPK separately.
- Optional synchronization and ganging kit available; order PSYK separately. Up to four WorkTable Pro bases can be synchronized together; one PSYK needed per base joint.

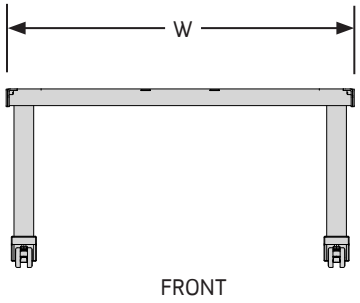

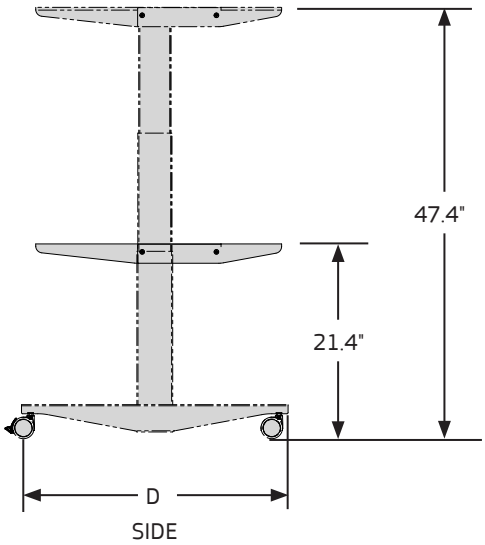

How to Specify

Step 1. Product Number

PWTC Caster Base
PWTG Glide Base

Step 2. Depth

30 30" deep

Step 3. Width

36 36" wide **48** 48" wide **60** 60" wide
72 72" wide

Step 4. Switch Style

J Rocker Switch (standard)
C Rocker Switch, 3-memory settings, digital display (upcharge)
K Rocker Switch, 3-memory settings (upcharge)



DPFIK
"**J**" switch (standard)



DPFIC
"**C**" switch (upcharge)



DPFIM
"**K**" switch (upcharge)

To substitute the "C" or "K" switch for the standard "J" switch:

1. Deduct the list price for the DPFIK ("J" switch) from the ErgoStat Pro Base list price.
2. Add the list price of the new switch to the WorkTable Pro Base list price. ***Example***: To substitute "K" switch on the WorkTable Pro Base with casters, part# PWTC3036J becomes PWTC3036K.

WORKTABLE PRO ELECTRIC BASE *(Cont'd)*

Step 5. Select a color code for the Legs, Feet and Casters: **(select one of each)**

LEG AND STRETCHER
- **AS** Argent Silver
- **AW** Arctic White
- **BK** Black

FOOT
- **AS** Argent Silver
- **AW** Arctic White
- **BK** Black
- **GL** Grey Light
- **NW** Neutral White

CASTER / GLIDE*
- **AS** Silver with Dark Grey Tread
- **AW** White with Dark Grey Tread
- **BK** Black

*Glide is black only

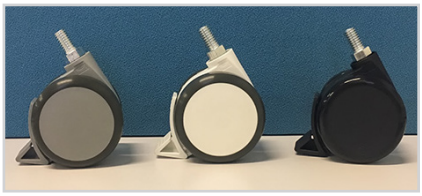

ErgoStat Pro Base Specification Breakdown (example)

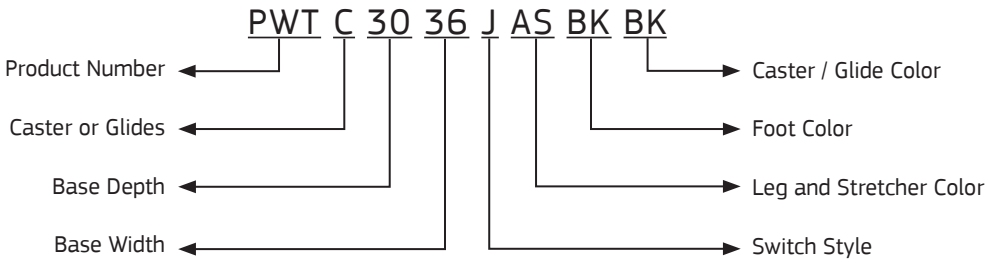

Product Number	Description	Width in.	Width [mm]	Depth in.	Depth [mm]	Weight lb.	Weight [kg]
PWTC3036	Casters	29 5/8	746	29 3/8	744	63	28.6
PWTC3048	Casters	41 3/8	1051	29 3/8	744	66	29.9
PWTC3060	Casters	53 3/8	1361	29 3/8	744	68	30.8
PWTC3072	Casters	65 3/8	1660	29 3/8	744	71	32.2
PWTG3036	Glides	29 5/8	746	29 5/8	752	66	29.9
PWTG3048	Glides	41 3/8	1051	29 5/8	752	69	31.3
PWTG3060	Glides	53 3/8	1361	29 5/8	752	72	32.7
PWTG3072	Glides	65 3/8	1660	29 5/8	752	74	33.6
PEBPK	Battery pack	8 1/4	210	3	76	1	0.5
PSYK	Synchronization and ganging kit	3	76	-	-	1	0.5

Rev 07.10.26

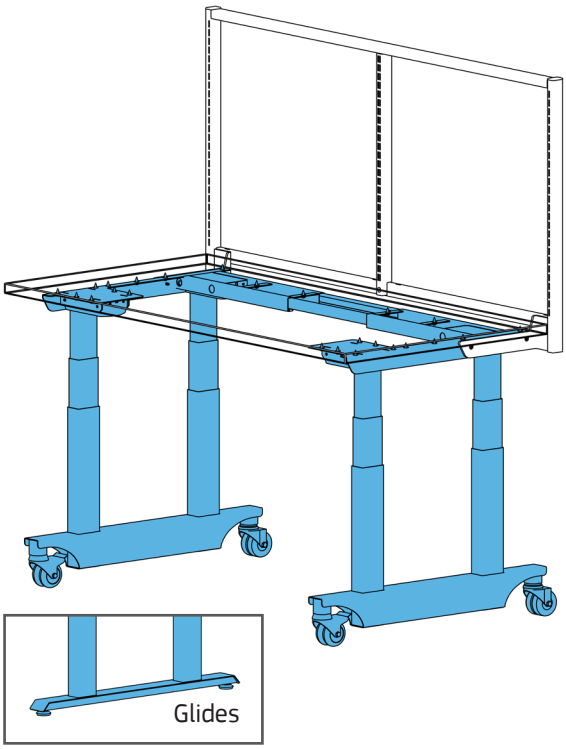

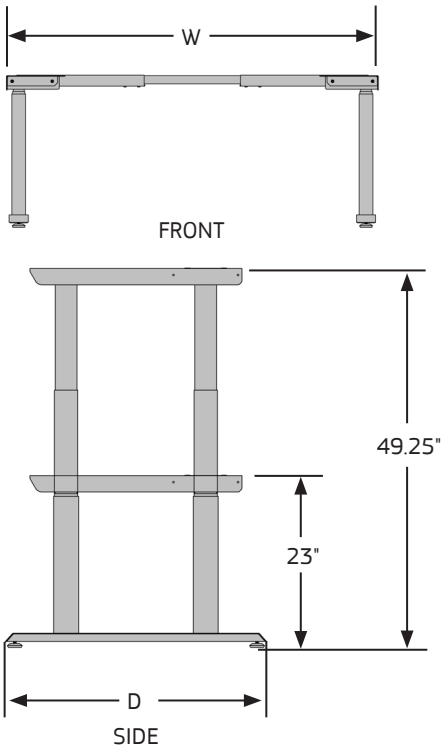

FORTIS PRO ELECTRIC BASE

Available with casters or glides, the Fortis Pro electric base is adjustable in width from 41 ⅜" to 65 ⅜" and can be used with 30" and 36" deep work surfaces. Includes built-in anti-collision technology with a dynamic load capacity of 600 lbs. evenly distributed. The Fortis Pro base rises 1.5" per second and is built using UL Listed components with a 10% duty-cycle, 9.5' power cord and a programmable 3-position memory hand control switch. Ships knocked down.

To build a workstation add a Full Width Pro Riser Frame, page 2.4 and worksurface (please see Product Catalog Section 4). Riser Frame attaches to the base adding vertical support for hanging components sold separately.

- Vertical travel range is 26.25": 23" to 49.25" to bottom of the work surface.
- Can use work surfaces from 48" to 96" in width.
- Maximum width Riser Frame is 72".

How to Specify

Step 1. Product Number

FPEC Caster Base
FPEG Glide Base

Step 2. Paint Color Code

AS Argent Silver
AW Arctic White
BK Black

Product Number	Description	Height		Width		Depth		Weight	
		in.	[mm]	in.	[mm]	in.	[mm]	lb.	[kg]
FPEC	Casters	23 - 49 ¼	584 - 1251	41 ⅜ - 65 ⅜	1051 - 1661	33	838	142	64.4
FPEG	Glides	23 - 49 ¼	584 - 1251	41 ⅜ - 65 ⅜	1051 - 1661	33	838	145	65.8

Rev 07.10.26



TOUCH UP PAINT

Repair small blemishes on painted surfaces with touch up paint. The 6 fluid ounce aerosol spray cans may not be shipped via air transport.

How to Specify

Step 1. Product Number

Product Number	Description	Weight lb.	Weight [kg]
TPAS	Argent Silver	1	.5
TPAW	Arctic White	1	.5
TPBK	Black	1	.5
TPGL	Grey Light Smooth	1	.5
TPNW	Neutral White	1	.5

Rev 07.10.26

SECTION 3. WORK SURFACES

Standard Work Surface 3.2
Corner Work Surface 3.3
Hardwood Work Surface 3.4
Auxiliary Work Surface 3.5

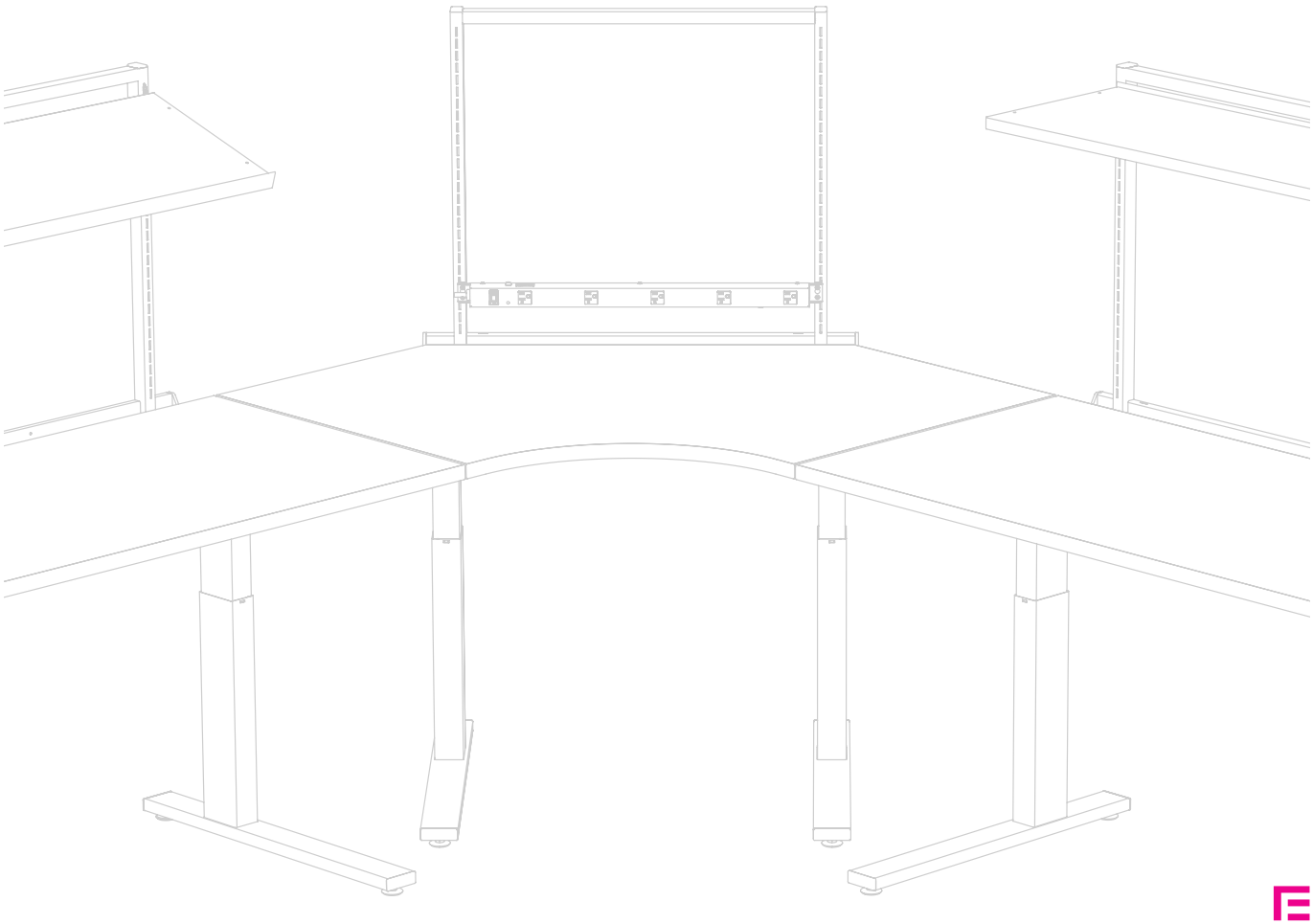

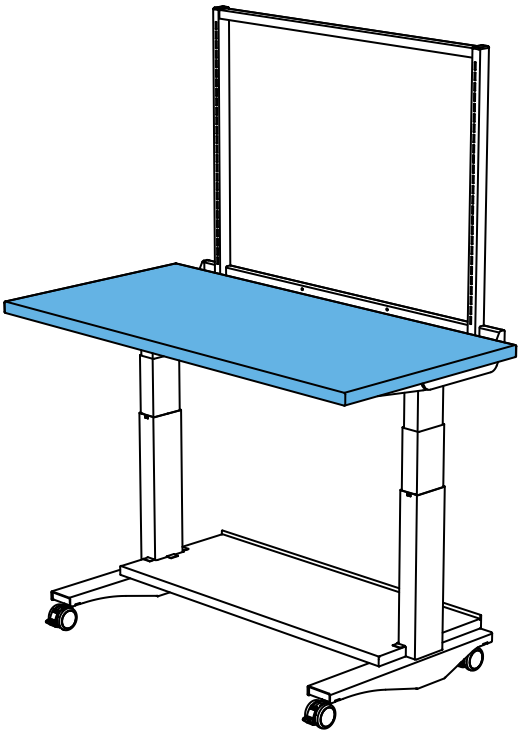

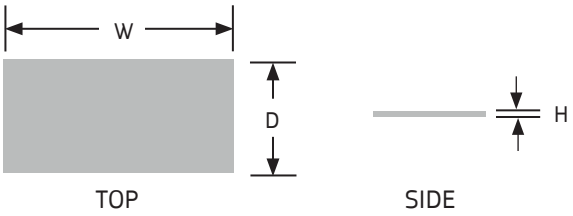

STANDARD WORK SURFACE

The 1¼" high laminate work surfaces mount to the ErgoStat Pro base. Surfaces have square corners with a 3mm edge band.

- Load capacity is 300 lbs. evenly distributed.
- Riser Frames cannot be used with 36" deep work surfaces.

How to Specify

Step 1. Product Number

PSLS

Step 2. Depth

24 24" deep **30** 30" deep **36** 36" deep

Step 3. Width

36 36" wide **48** 48" wide
60 60" wide **72** 72" wide

Step 4. Laminate Color Code

Standard

BK Black
GL Grey Light
NW Neutral White

Premium (consult factory)

AH Ash Grey
AW Arctic White
CG Chai Grain
DF Driftwood
EG Espresso Grain
MG Mocha Grain
SP Silver Oak Ply
WW Weathered Wood

Step 5. Edgeband Color Code

AW Arctic White
AS Argent Silver
BK Black
BR Brown
GL Grey Light
NW Neutral White
SH Shadow

Product Number	Description	Height		Width		Depth		Weight	
		in.	[mm]	in.	[mm]	in.	[mm]	lb.	[kg]
PSLS2436	Standard laminate, square edge	1 ¼	32	36	914	24	610	29	13.2
PSLS2448	Standard laminate, square edge	1 ¼	32	48	1219	24	610	36	16.3
PSLS2460	Standard laminate, square edge	1 ¼	32	60	1524	24	610	45	20.4
PSLS2472	Standard laminate, square edge	1 ¼	32	72	1829	24	610	54	24.5
PSLS3036	Standard laminate, square edge	1 ¼	32	36	914	30	762	36	16.3
PSLS3048	Standard laminate, square edge	1 ¼	32	48	1219	30	762	45	20.4
PSLS3060	Standard laminate, square edge	1 ¼	32	60	1524	30	762	56	25.4
PSLS3072	Standard laminate, square edge	1 ¼	32	72	1829	30	762	67	30.4
PSLS3636	Standard laminate, square edge	1 ¼	32	36	914	36	914	43	19.5
PSLS3648	Standard laminate, square edge	1 ¼	32	48	1219	36	914	54	24.5
PSLS3660	Standard laminate, square edge	1 ¼	32	60	1524	36	914	67	30.4
PSLS3672	Standard laminate, square edge	1 ¼	32	72	1829	36	914	80	36.3

Rev 07.10.26

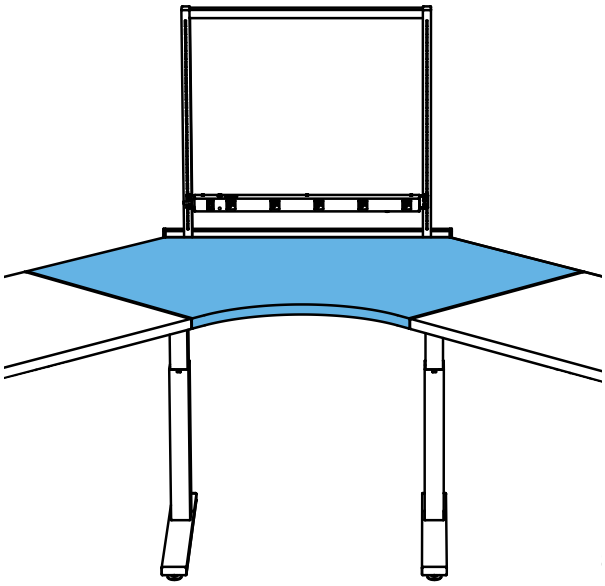

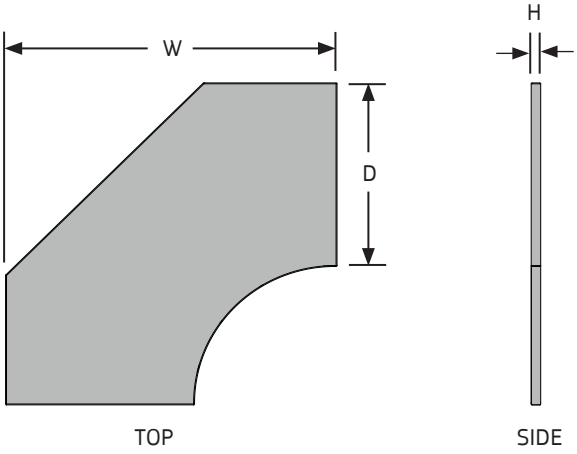

CORNER WORK SURFACE

The 1¼" high laminated corner work surfaces mount to the ErgoStat Pro base. Surfaces have square corners with a 3mm edge band.

- Load capacity is 200 lbs. evenly distributed.
- Riser Frames cannot be used with 36" deep work surfaces.

How to Specify

Step 1. Product Number

PSCLS

Step 2. Depth

24 24" deep
30 30" deep
36 36" deep

Step 3. Width

42 42" wide
48 48" wide

Step 4. Laminate Color Code

Standard

BK Black
GL Grey Light
NW Neutral White

Premium (consult factory)

AH Ash Grey
AW Arctic White
CG Chai Grain
DF Driftwood
EG Espresso Grain
MG Mocha Grain
SP Silver Oak Ply
WW Weathered Wood

Step 5. Edgeband Color Code

AW Arctic White
AS Argent Silver
BK Black
BR Brown
GL Grey Light
NW Neutral White
SH Shadow

Product Number	Description	Height		Width		Depth		Weight	
		in.	[mm]	in.	[mm]	in.	[mm]	lb.	[kg]
PSCLS2442	Standard laminate, square edge	1 ¼	32	42	1067	24	610	54	24.5
PSCLS2448	Standard laminate, square edge	1 ¼	32	48	1219	24	610	60	20.4
PSCLS3042	Standard laminate, square edge	1 ¼	32	42	1067	30	762	53	29.5
PSCLS3048	Standard laminate, square edge	1 ¼	32	48	1219	30	762	65	24.0
PSCLS3648	Standard laminate, square edge	1 ¼	32	48	1219	36	914	72	32.7

Rev 07.10.26

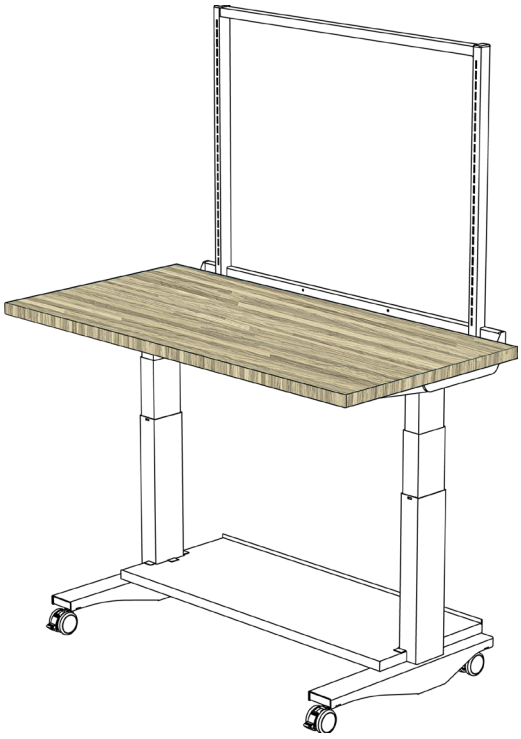

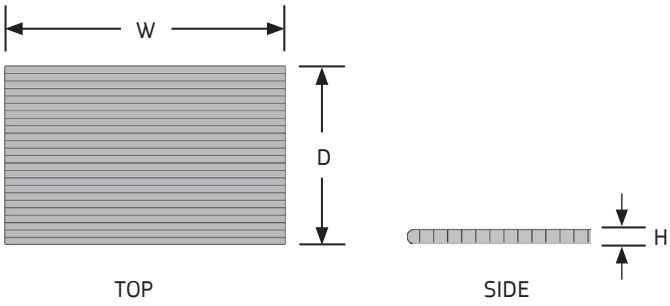

HARDWOOD WORK SURFACE

The 1¾" high hardwood surfaces mount to the ErgoStat Pro base. Surfaces consist of kiln-dried hardwood strips face glued, sanded smooth and finished with a two coat catalyzed varnish. Surfaces have a square-edged front, back and sides.

- Load capacity is 500 lbs. evenly distributed.
- Riser Frames cannot be used with 36" deep surfaces.

How to Specify

Step 1. Product Number

SHS

Step 2. Depth

30 30" deep
36 36" deep

Step 3. Width

36 48" wide
48 48" wide
60 60" wide
72 72" wide

Product Number	Description	Height		Width		Depth		Weight	
		in.	[mm]	in.	[mm]	in.	[mm]	lb.	[kg]
SHS3036CC	Hardwood, 1¾"	1 ¾	32	36	914	30	762	53	24.0
SHS3048CC	Hardwood, 1¾"	1 ¾	32	48	1219	30	762	70	31.8
SHS3060CC	Hardwood, 1¾"	1 ¾	32	60	1524	30	762	88	39.9
SHS3072CC	Hardwood, 1¾"	1 ¾	32	72	1829	30	762	105	47.6
SHS3636CC	Hardwood, 1¾"	1 ¾	32	36	914	36	914	63	28.6
SHS3648CC	Hardwood, 1¾"	1 ¾	32	48	1219	36	914	84	38.1
SHS3660CC	Hardwood, 1¾"	1 ¾	32	60	1524	36	914	105	47.6
SHS3672CC	Hardwood, 1¾"	1 ¾	32	72	1829	36	914	126	57.2

Rev 07.10.26

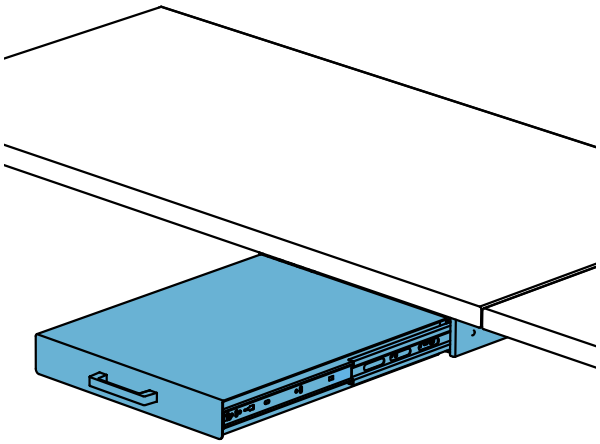

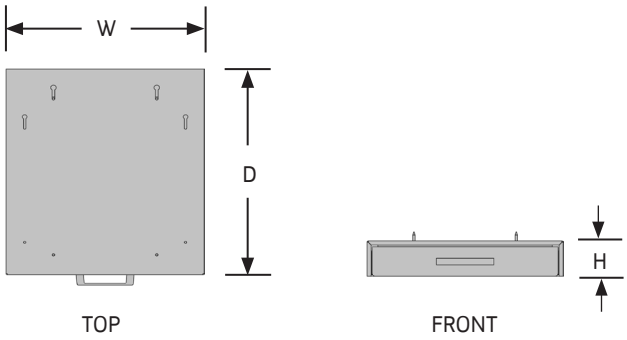

AUXILIARY WORK SURFACE

Steel platform and housing mounts under surfaces to provide an additional work space. Features 18" full-extension ball-bearing slides with in and out detent.

- Load capacity is 35 pounds evenly distributed.
- Auxiliary Work Surface only mounts under standard and corner work surfaces > 24" deep.

How to Specify

Step 1. Product Number

AWS1518

Step 2. Paint Color Code

AS Argent Silver
AW Arctic White
BK Black
GL Grey Light
NW Neutral White

Product Number	Description	Height		Width		Depth		Weight	
		in.	[mm]	in.	[mm]	in.	[mm]	lb.	[kg]
AWS1518	Auxiliary work surface	2 ⅝	67	15	381	18	457	16	7.0

Rev 07.10.26

this page left
BLANK

SECTION 4. SHELVING

Multi-Function Shelf 4.2
Bookend Shelf. 4.3
Display Shelf. 4.4
Shelf Add-on Lip. 4.5
Lower Shelf 4.6
4-Legged Table Lower Shelf 4.7

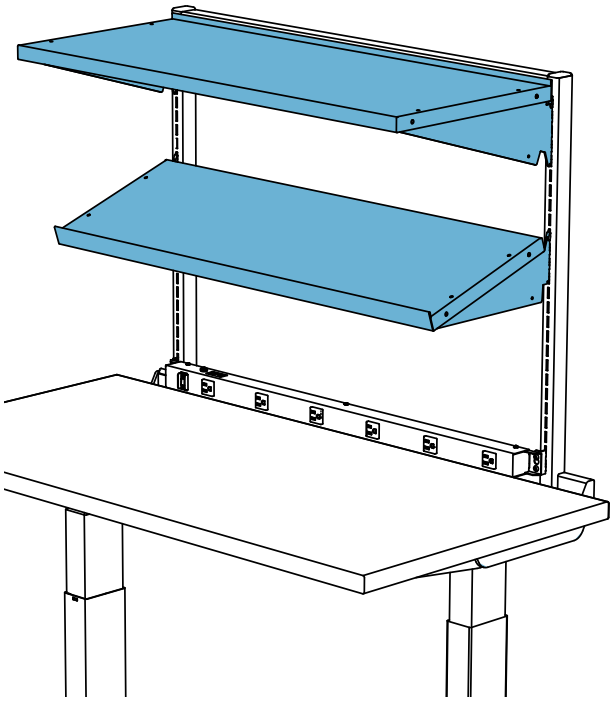

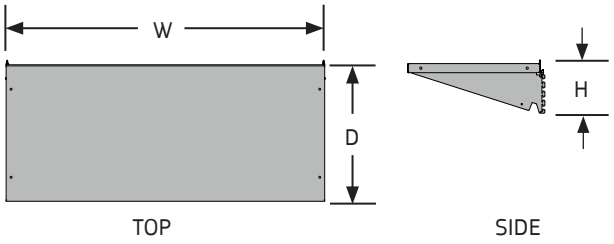

MULTI-FUNCTION SHELF

Shelves provide general storage in Pro workstations. Assemblies include two steel support brackets and one shelf with a ½" raised edge that can be positioned in the front or back. Shelves mount flat or in the sloped position.

- Load capacity is 100 lbs. evenly distributed.
- Included anti-disengagement clips help secure the component in the Riser Frame.
- Shelf Add-on Lip sold separately. See page 4.5.

How to Specify

Step 1. Product Number

PMFS

Step 2. Depth

11 11" deep
15 15" deep

Step 3. Width

24 24" wide
30 30" wide
36 36" wide
48 48" wide
60 60" wide
72 72" wide

Step 4. Paint Color Code

AS Argent Silver
AW Arctic White
BK Black
GL Grey Light
NW Neutral White

Product Number	Description	Height		Width		Depth		Weight	
		in.	[mm]	in.	[mm]	in.	[mm]	lb.	[kg]
PMFS1124	Multi-function shelf	5 ½	140	24	610	11 ½	292	15	6.8
PMFS1130	Multi-function shelf	5 ½	140	30	762	11 ½	292	17	7.7
PMFS1136	Multi-function shelf	5 ½	140	36	914	11 ½	292	19	8.6
PMFS1148	Multi-function shelf	5 ½	140	48	1219	11 ½	292	21	9.5
PMFS1160	Multi-function shelf	5 ½	140	60	1524	11 ½	292	25	11.3
PMFS1172	Multi-function shelf	5 ½	140	72	1829	11 ½	292	28	12.7
PMFS1524	Multi-function shelf	6 ½	165	24	610	15	381	17	7.7
PMFS1530	Multi-function shelf	6 ½	165	30	762	15	381	20	9.1
PMFS1536	Multi-function shelf	6 ½	165	36	914	15	381	23	10.4
PMFS1548	Multi-function shelf	6 ½	165	48	1219	15	381	27	12.2
PMFS1560	Multi-function shelf	6 ½	165	60	1524	15	381	32	14.5
PMFS1572	Multi-function shelf	6 ½	165	72	1829	15	381	36	16.3

Rev 07.10.26

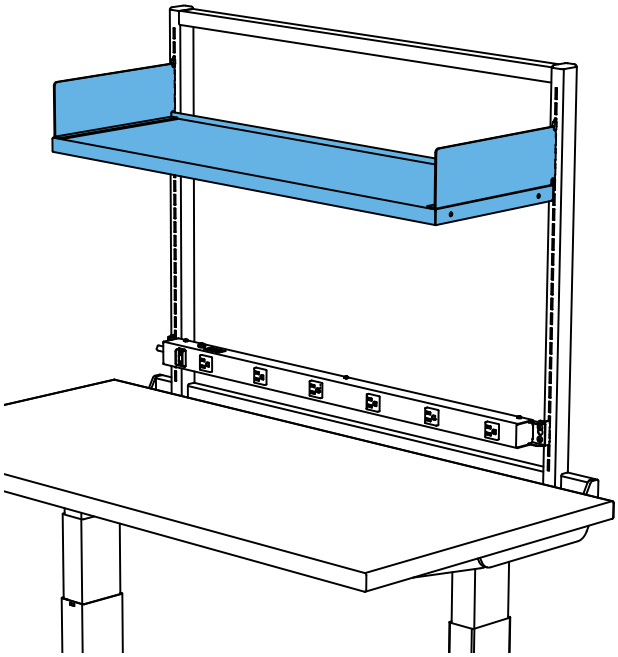

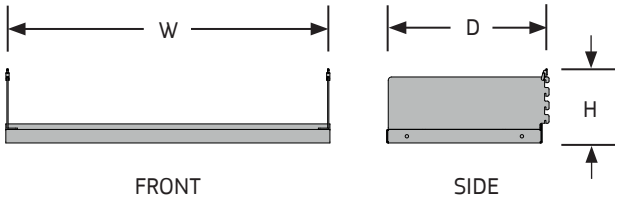

BOOKEND SHELF

Bookend shelves mount in the Pro Riser Frame providing general storage. Shelf can be oriented with the ½" raised edge facing toward the front or back of the workstation.

- Load capacity is 100 lbs. evenly distributed.
- Included anti-disengagement clips help secure the component in the Riser Frame.
- Shelf Add-on Lip sold separately. See page 4.5.

How to Specify

Step 1. Product Number

PBES

Step 2. Depth

11 11" deep
15 15" deep

Step 3. Width

24 24" wide
30 30" wide
36 36" wide
48 48" wide
60 60" wide
72 72" wide

Step 4. Paint Color Code

AS Argent Silver
AW Arctic White
BK Black
GL Grey Light
NW Neutral White

Product Number	Description	Height		Width		Depth		Weight	
		in.	[mm]	in.	[mm]	in.	[mm]	lb.	[kg]
PBES1124	Bookend shelf	4 ⅞	124	24	608	11 ½	292	10	4.3
PBES1130	Bookend shelf	4 ⅞	124	30	762	11 ½	292	11	5.0
PBES1136	Bookend shelf	4 ⅞	124	36	914	11 ½	292	13	5.7
PBES1148	Bookend shelf	4 ⅞	124	48	1219	11 ½	292	16	7.3
PBES1160	Bookend shelf	4 ⅞	124	60	1524	11 ½	292	19	8.4
PBES1172	Bookend shelf	4 ⅞	124	72	1829	11 ½	292	22	10.0
PBES1524	Bookend shelf	5 ⅞	149	24	610	15	381	13	5.7
PBES1530	Bookend shelf	5 ⅞	149	30	762	15	381	15	6.6
PBES1536	Bookend shelf	5 ⅞	149	36	914	15	381	17	7.5
PBES1548	Bookend shelf	5 ⅞	149	48	1219	15	381	20	9.2
PBES1560	Bookend shelf	5 ⅞	149	60	1524	15	381	24	11.0
PBES1572	Bookend shelf	5 ⅞	149	72	1829	15	381	28	12.7

Rev 07.10.26

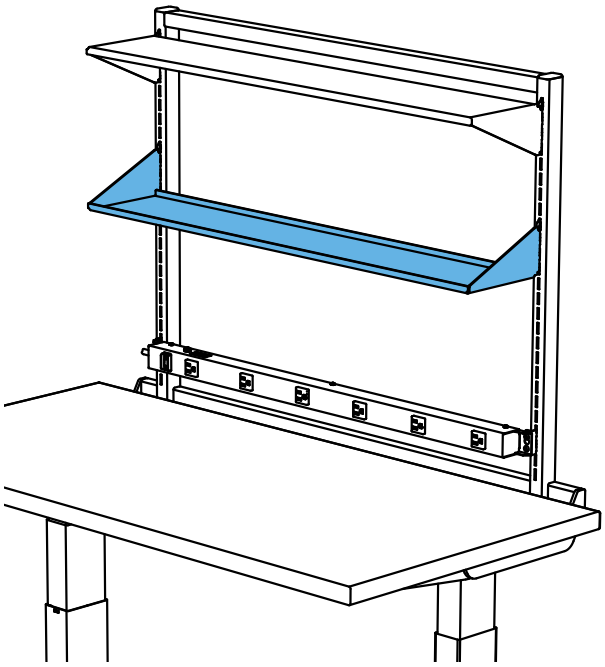

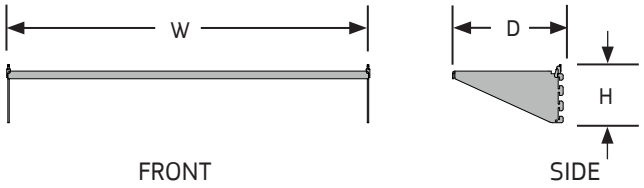

DISPLAY SHELF

Display shelves mount to the Pro Riser Frame and provide light duty storage for workstations. The one-piece steel shelf assembly has a front and back ½" lip to secure contents. Shelf is reversible and can be oriented with supports below surface of shelf (top image), or with supports mounted upwards (bottom image) to provide side supports to secure contents.

- Load capacity is 40 lbs. evenly distributed.
- Included anti-dislodgement clips help secure the component in the Riser Frame.

How to Specify

Step 1. Product Number

PDS

Step 2. Width

24 24" wide
30 30" wide
36 36" wide

Step 3. Paint Color Code

AS Argent Silver
AW Arctic White
BK Black
GL Grey Light
NW Neutral White

Product Number	Description	Height		Width		Depth		Weight	
		in.	[mm]	in.	[mm]	in.	[mm]	lb.	[kg]
PDS24	Display shelf	3 ½	89	23 ¾	603	6 ½	165	5	2.0
PDS30	Display shelf	3 ½	89	29 ¾	756	6 ½	165	6	3.0
PDS36	Display shelf	3 ½	89	35 ¾	908	6 ½	165	7	3.0

Rev 07.10.26

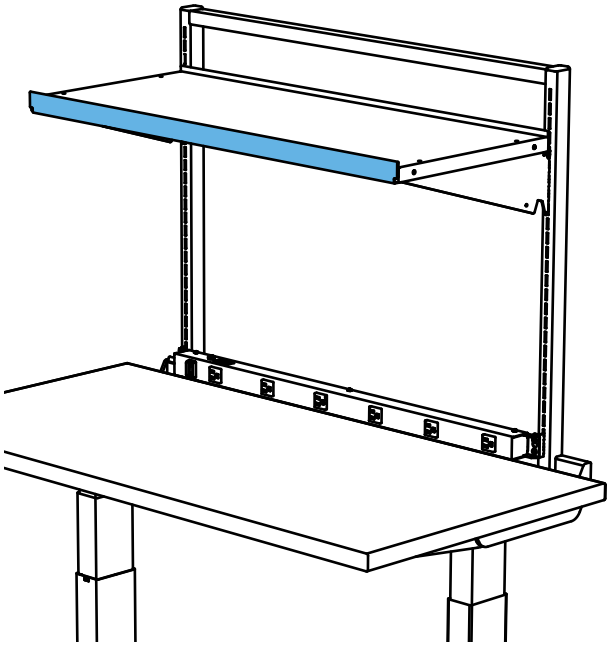

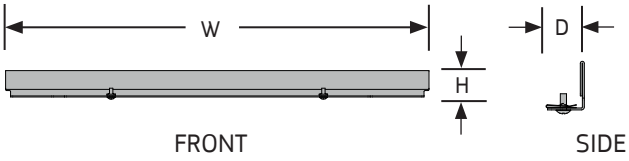

SHELF ADD-ON LIP

Shelf add-on lip mounts to the front of Multi-Function and Bookend Shelves on workstations. The one-piece steel assembly provides a lip to secure contents.

- Multi-Function Shelf and Bookend Shelf are sold separately. See pages 4.2 and 4.3.

How to Specify

Step 1. Product Number

MFSL

Step 2. Width

24	24" wide	**48**	48" wide
30	30" wide	**60**	60" wide
36	36" wide		

Step 3. Paint Color Code

AS	Argent Silver
AW	Arctic White
BK	Black
GL	Grey Light
NW	Neutral White

Product Number	Description	Height		Width		Depth		Weight	
		in.	[mm]	in.	[mm]	in.	[mm]	lb.	[kg]
MFSL24	Shelf add-on lip	1 ½	38	24	610	1	29	2	1.0
MFSL30	Shelf add-on lip	1 ½	38	30	762	1	29	2	1.0
MFSL36	Shelf add-on lip	1 ½	38	36	914	1	29	3	1.0
MFSL48	Shelf add-on lip	1 ½	38	48	1219	1	29	3	1.0
MFSL60	Shelf add-on lip	1 ½	38	60	1524	1	29	4	2.0

Rev 07.10.26

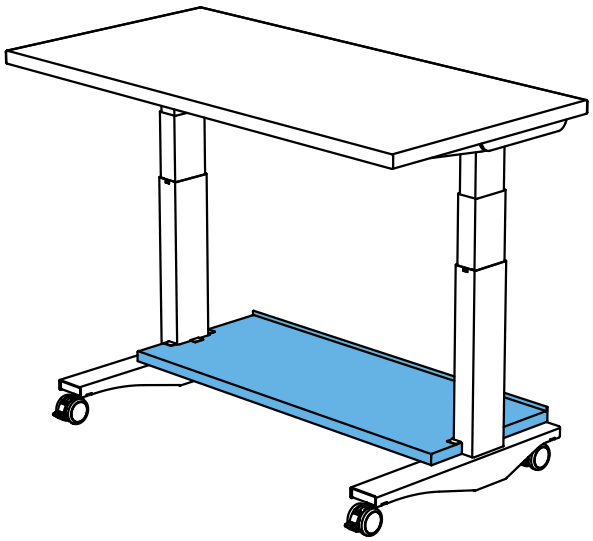

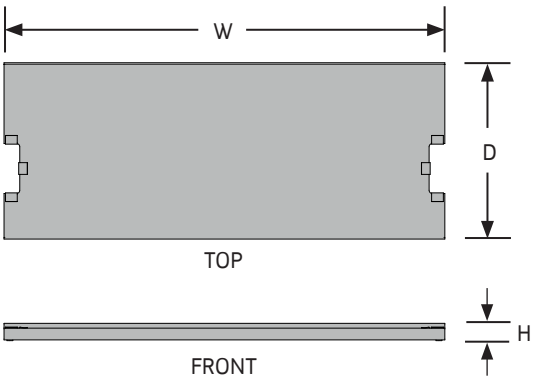

LOWER SHELF

Lower shelf provides general storage below the ErgoStat Pro work surface. It has a ½" raised edge on the back to keep items from sliding off the back of the shelf. Installs easily without hardware or tools.

- Mounts to glide or caster bases.
- Load capacity is 100 lbs. evenly distributed.

How to Specify

Step 1. Product Number

PLES

Step 2. Width

36 36" wide
42 42" wide
48 48" wide
60 60" wide
72 72" wide

Step 3. Paint Color Code

AS Argent Silver
AW Arctic White
BK Black
GL Grey Light
NW Neutral White

Product Number	Description	Height		Width		Depth		Weight	
		in.	[mm]	in.	[mm]	in.	[mm]	lb.	[kg]
PLES36	36" base mount	1 ½	38	26	648	15	381	9	4.1
PLES42	42" base mount	1 ½	38	32	800	15	381	11	5.0
PLES48	48" base mount	1 ½	38	38	953	15	381	13	5.9
PLES60	60" base mount	1 ½	38	50	1257	15	381	17	7.5
PLES72	72" base mount	1 ½	38	62	1562	15	381	21	9.5

Rev 08.31.26

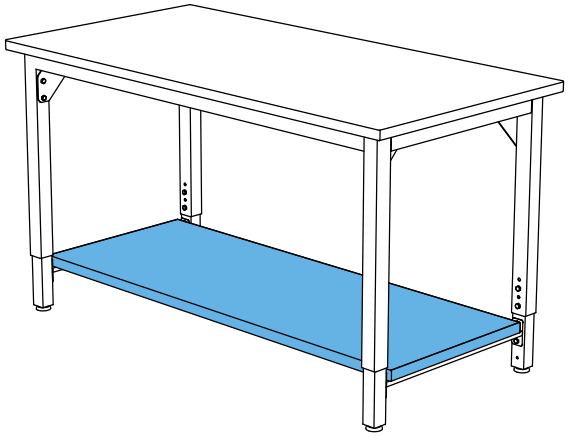

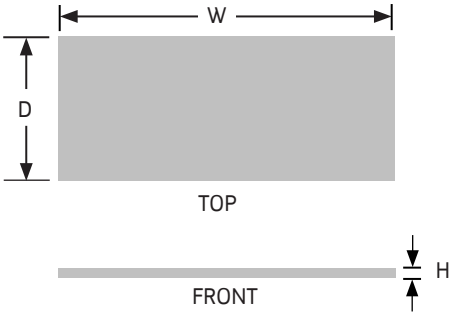

4-LEGGED TABLE LOWER SHELF

Lower Shelves provide general storage below the surface of 4-Legged Table bases. Available in full or half depth sizes, laminate shelves have square corners with matching edge band. Shelves attach to 4-Legged Table support bars with hook and loop strips.

- Mounts to glide or caster bases.
- Full size shelf load capacity is 200 lbs. evenly distributed.
- Half size shelf load capacity is 100 lbs. evenly distributed.
- Half size unavailable for 24" deep 4-Legged Tables.

How to Specify

Step 1. Product Number

FLSLH Half Depth
FLSLF Full Depth

Step 2. Depth

24 24" deep Full Depth only
30 30" deep Half and Full Depth
36 36" deep Half and Full Depth

Step 3. Width

48 48" wide **60** 60" wide **72** 72" wide

Step 4. Laminate Color Code

Standard
BK Black
GL Grey Light
NW Neutral White

Premium (consult factory)
AH Ash Grey
AW Arctic White
CG Chai Grain
DF Driftwood
EG Espresso Grain
MG Mocha Grain
SP Silver Oak Ply
WW Weathered Wood

Step 5. Edgeband Color Code

AW Arctic White
AS Argent Silver
BK Black
BR Brown
GL Grey Light
NW Neutral White
SH Shadow

Product Number	Description	Height		Width		Depth		Weight	
		in.	[mm]	in.	[mm]	in.	[mm]	lb.	[kg]
FLSLH3048	Lower shelf, half depth	1 ¼	32	44	1118	11	279	19	8.6
FLSLH3060	Lower shelf, half depth	1 ¼	32	56	1422	11	279	23	10.4
FLSLH3072	Lower shelf, half depth	1 ¼	32	68	1727	11	279	27	12.2
FLSLH3648	Lower shelf, half depth	1 ¼	32	44	1118	14	356	23	10.4
FLSLH3660	Lower shelf, half depth	1 ¼	32	56	1422	14	356	29	13.2
FLSLH3672	Lower shelf, half depth	1 ¼	32	68	1727	14	356	36	16.3

Cont'd

4-LEGGED TABLE LOWER SHELF *(Cont'd)*

Product Number	Description	Height		Width		Depth		Weight	
		in.	[mm]	in.	[mm]	in.	[mm]	lb.	[kg]
FLSLF2448	Lower shelf, full depth	1 ¼	32	44	1118	16	406	26	11.8
FLSLF2460	Lower shelf, full depth	1 ¼	32	56	1422	16	406	34	15.4
FLSLF2472	Lower shelf, full depth	1 ¼	32	68	1727	16	406	40	18.1
FLSLF3048	Lower shelf, full depth	1 ¼	32	44	1118	22	559	38	17.2
FLSLF3060	Lower shelf, full depth	1 ¼	32	56	1422	22	559	46	20.9
FLSLF3072	Lower shelf, full depth	1 ¼	32	68	1727	22	559	54	24.5
FLSLF3648	Lower shelf, full depth	1 ¼	32	44	1118	28	711	46	20.9
FLSLF3660	Lower shelf, full depth	1 ¼	32	56	1422	28	711	58	26.3
FLSLF3672	Lower shelf, full depth	1 ¼	32	68	1727	28	711	72	32.7

Rev 03/11/19

SECTION 5. ELECTRICAL

Electric Plug Strip 5.2
High Output LED Lights 5.3

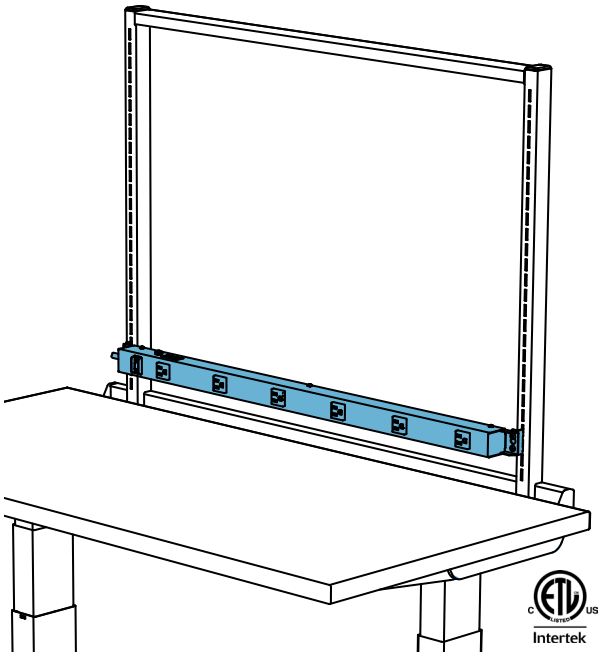

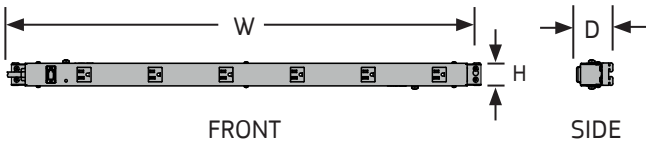

ELECTRIC PLUG STRIP

Plug Strips provide single circuit, 15 Amp or 20 Amp, 110 Volt outlets where needed on Pro Riser Frames. Each strip includes NEMA configuration 5-15R/5-20R black simplex receptacles and a 5-15P/5-20P plug. Mount horizontally to frames on hanger clips. One threaded insert is located on each end for grounding of dissipative workstation components.

- Power cords exit the end of each Plug Strip where the switch is located.
- 20 Amp Plug Strips will not plug into 15 Amp Plug Strips.
- Plug Strips conform to ANSI/UL std.1363 and CSA C22.2.21.
- Includes a lighted, rocker-actuated circuit breaker with a built-in safety guard and an 8' power cord.

How to Specify

Step 1. Product Number

PEPS 15 Amp
PEP20 20 Amp

Step 2. Width

24 24" wide
30 30" wide
36 36" wide
48 48" wide
60 60" wide
72 72" wide

Step 3. Paint Color Code

AS Argent Silver
AW Arctic White
BK Black
GL Grey Light
NW Neutral White

Product Number	Description	Height		Width		Depth		Weight	
		in.	[mm]	in.	[mm]	in.	[mm]	lb.	[kg]
PEPS24	15 Amp, 4 outlets	2	[51]	24	610	2	[51]	3	1.0
PEPS30	15 Amp, 5 outlets	2	[51]	30	762	2	[51]	4	2.0
PEPS36	15 Amp, 6 outlets	2	[51]	36	914	2	[51]	5	2.0
PEPS48	15 Amp, 8 outlets	2	[51]	48	1219	2	[51]	6	3.0
PEPS60	15 Amp, 10 outlets	2	[51]	60	1524	2	[51]	7	3.0
PEPS72	15 Amp, 15 outlets	2	[51]	72	1524	2	[51]	9	3.0
PEP2024	20 Amp, 4 outlets	2	[51]	24	610	2	[51]	3	1.0
PEP2030	20 Amp, 5 outlets	2	[51]	30	762	2	[51]	4	2.0
PEP2036	20 Amp, 6 outlets	2	[51]	36	914	2	[51]	5	2.0
PEP2048	20 Amp, 8 outlets	2	[51]	48	1219	2	[51]	6	3.0
PEP2060	20 Amp, 10 outlets	2	[51]	60	1524	2	[51]	7	3.0
PEP2072	20 Amp, 15 outlets	2	[51]	72	1524	2	[51]	9	3.0

Rev 07.10.26

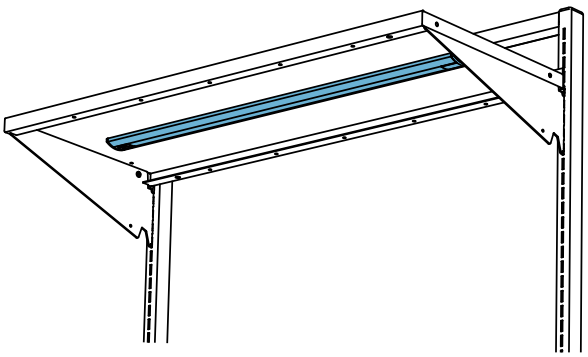

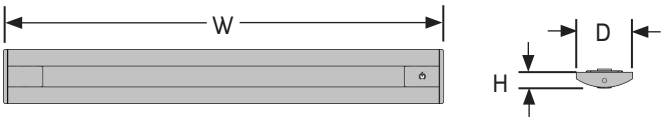

BOTTOM SIDE

Interconnected LED light fixtures must not exceed 60W. Layout combinations are as follows:

17" LED QTY	31" LED QTY	44" LED QTY	58" LED QTY
4	0	0	0
3	0	0	0
2	1	0	0
1	1	0	0
1	0	1	0
0	2	0	0
0	0	1	0
0	0	0	1

HIGH OUTPUT LED LIGHTS

LED Lights

High output LED lights provide high efficiency lighting for general tasks with a 3500K temperature, 84CRI and 50,000 hour life span. Lights have a touch-and-hold continuous dimming with 10 hour automatic shut off. ETL, TAA and BAA certified. Color is clear anodized aluminum housing with white end caps.

- Starter kits include one 60W Power Supply with 12' cord.
- Includes screw and pivoting magnetic mounting kit with adhesive cord managers.
- Adder kits include the light, (1) 8" and (1) 30" length jumper. Power supply not included.
- End-to-end connectors can be used between lights in place of a jumper. Additional jumpers sold separately.
- Recommended shelf size:

  17" LED Light - 24", 30" and 36"
  31" LED Light - 48" and larger
  44" LED Light - 60" and larger

Occupancy Sensor

Passive infrared (PIR) integrated occupancy sensor automatically turns off all interconnected fixtures after 30 minutes of no movement detection.

How to Specify

Step 1. Product Number

Product Number	Description	Lumens	Wattage	Height in.	Height [mm]	Width in.	Width [mm]	Depth in.	Depth [mm]	Weight lb.	Weight [kg]
LEDHS17SVW	Starter unit	744	12.8	½	13	16 ½	419	2	51	1 ¼	0.6
LEDHS31SVW	Starter unit	1590	28.4	½	13	30 ⅛	765	2	51	1 ¾	0.8
LEDHS44SVW	Starter unit	2290	42.5	½	13	43 ¾	1111	2	51	2 ¼	1.0
LEDHA17SVW	Adder unit	744	10.9	½	13	16 ½	419	2	51	1 ¼	0.6
LEDHA31SVW	Adder unit	1590	23.4	½	13	30 ⅛	765	2	51	1 ¾	0.8
LEDHA44SVW	Adder unit	2290	34.3	½	13	43 ¾	1111	2	51	2 ¼	1.0
LEDMS	Motion sensor			½	13	2	51	2	51	1	0.5
LEDEC	End-to-end connector			½	13	2	51	2	51	¼	0.1
LEDP60	60 watt power supply			1 ¼	32	4 ½	114	2	51	1	0.5
LEDJ08	8” jumper (interconnect cord)			½	13	8	203	2	51	¼	0.1
LEDJ30	30” jumper (interconnect cord)			½	13	30	762	2	51	¼	0.1
LEDJ54	54” jumper (interconnect cord)			½	13	54	1372	2	51	¼	0.1

Rev 07.10.26

this page left
BLANK

SECTION 6. COMPUTER ACCESSORIES

CPU Holder 6.2
Monitor Arms 6.3
Monitor Arms, Add-On Posts 6.4
Slatwall / Bin Rail 6.5
Monitor Arm, Slatwall Mount 6.5
Arm Mount Platform, Keyboard, Mouse Tray 6.6
Notebook Holder. 6.6
Keyboard with Mouse Tray, Surface Mount. 6.7
Cable Tray 6.8
Modesty Panel 6.9

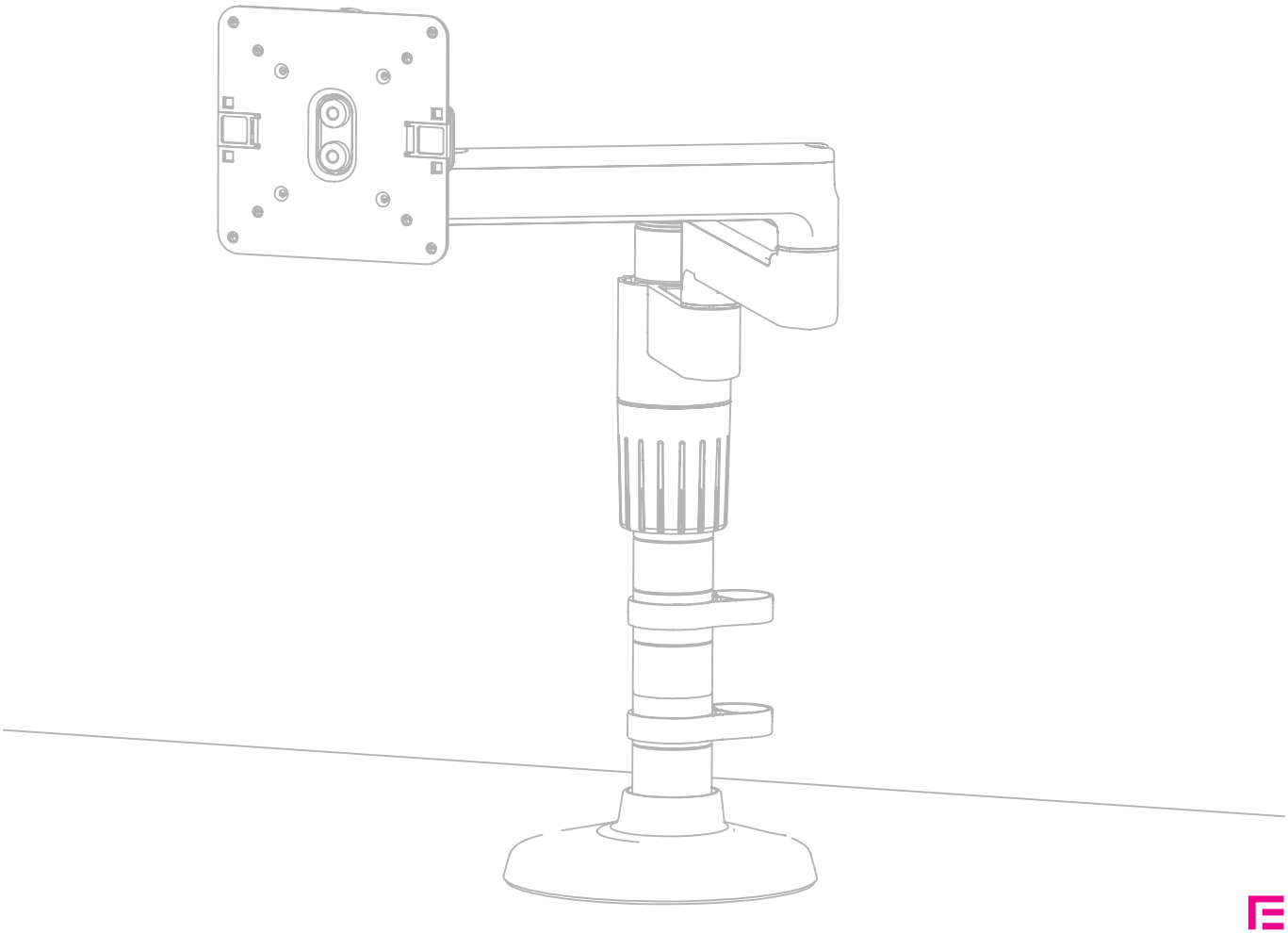

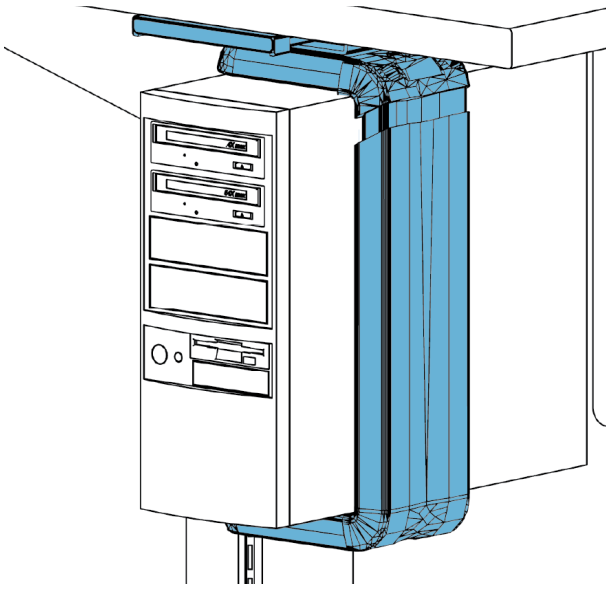

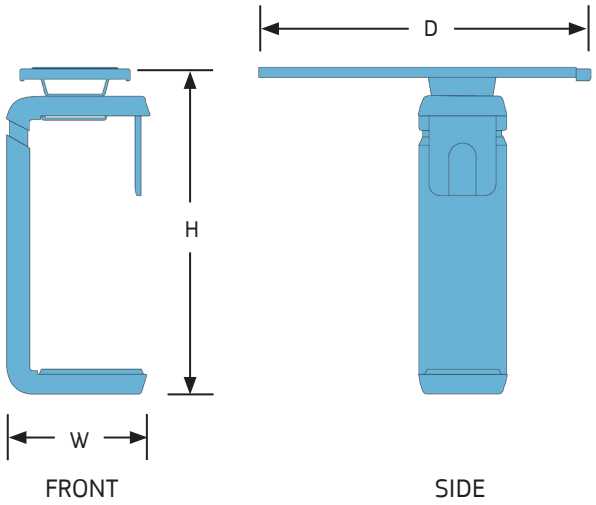

CPU HOLDER

CPU Holder provides vertical storage of computers below work surfaces. Sliding track allows unit to retract 9 inches and extend 4 inches from the front of the track. Unit swivels 360° for easy access. CPU Holder only mounts under standard and corner work surfaces > 24" deep.

- Fits CPUs 3.5-9 inches wide and 12-20 inches tall.
- Load capacity is 50 lbs.
- Finish is Black and Brushed Aluminum.

How to Specify

Step 1. Product Number

CPUBBK

Product Number	Description	Height		Width		Depth		Weight	
		in.	[mm]	in.	[mm]	in.	[mm]	lb.	[kg]
CPUBBK	CPU holder	16½-24	419-610	7⅛-10½	181-267	16	406	7	3.2

Rev 09.03.26

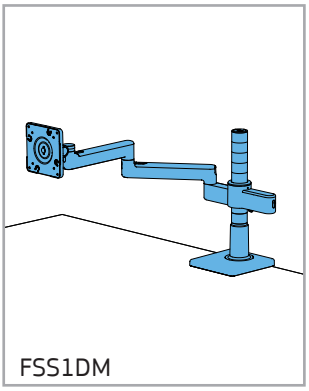
FSS1DM

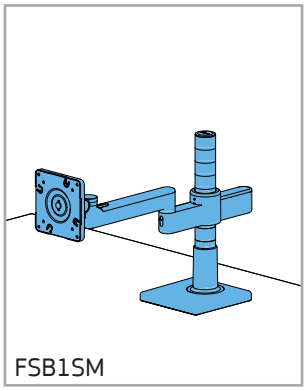
FSB1SM

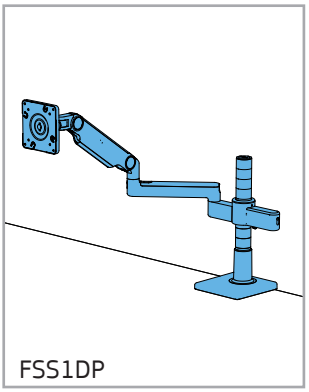
FSS1DP

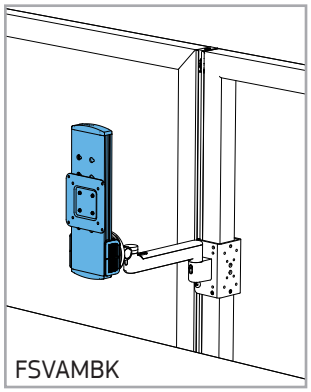
FSVAMBK

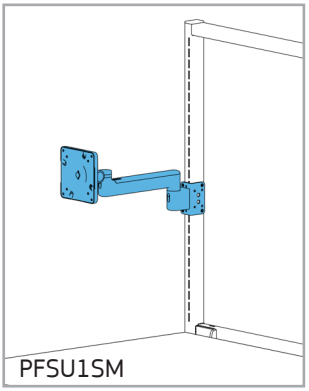
PFSU1SM

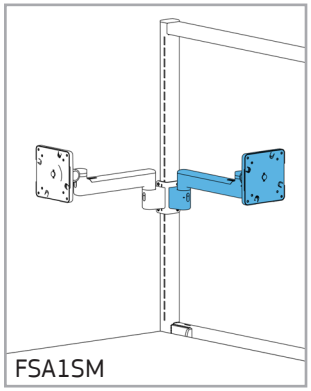
FSA1SM

MONITOR ARMS

Manual Flat Screen Arms

Arms support monitors and accessories weighing up to 15 lbs. Arms feature built-in cable management and 360º rotation for portrait or landscape viewing. Both 75mm and 100mm VESA mounting brackets are included.

- Surface Mount (**FSS1**) clamps to the edge of surfaces ranging from ½" to 2¾" thick.
- Bolt Mount (**FSB1**) bolts through a ½" to 3" diameter hole in surfaces up to 1½" thick.

Spring Adjustable Flat Screen Arm (FSS1DP)

Arms clamp to ½" to 2¾" thick surfaces and support monitors and accessories weighing up to 15 lbs. Arms feature 360º rotation for portrait or landscape viewing and a 10½" height adjustment range. Both 75mm and 100mm VESA mounting brackets are included.

Vertical Adjustment Mechanism (FSVAMBK)

The front vertical adjustment mechanism can be added to any arm to provide 9" of vertical adjustment without manual repositioning on post for flat screen monitors weighing up to 15 lbs. Finish is Silver with Black trim only.

Additional multiple monitor combinations available upon request. Consult factory for ordering information.

How to Specify

Step 1. Product Number

FSS1	Clamp Mount	**FSB1**	Bolt Mount
PFSU1	Saddle Mount	**FSA1**	Add-on Arm

Step 2. Arm Mount

SM	Single Arm, Manual	**DM**	Double Arm, Manual
DP	Double Arm, Dynamic *(Clamp Mount only)*		

Step 3. Finish Color Code

BK	Black
SG	Silver with Grey Trim
WA	Polished Aluminum with White Trim

Product Number	Description	Height in.	Height [mm]	Depth in.	Depth [mm]	Weight lb.	Weight [kg]
FSS1SM	Manual adj., clamp mount, 1 monitor, single arm	13 ¾	349	6 ½	165	12	5.4
FSS1DM	Manual adj., clamp mount, 1 monitor, double arm	13 ¾	349	8 ½	216	13	5.9
FSB1SM	Manual adj., bolt mount, 1 monitor, single arm	13 ¾	349	6 ½	165	12	5.4
FSB1DM	Manual adj., bolt mount, 1 monitor, double arm	13 ¾	349	8 ½	216	13	5.9
FSS1DP	Spring adjustable, 1 monitor, double arm	13 ¾	349	26	660	14	6.4
FSVAMBK	Flat screen vertical adjustment mechanism	13 ¾	349	1 ⅝	41	4	1.8
PFSU1SM	Saddle mount, 1 monitor, single arm	7 ¼	185	13	32	12	5.4
PFSU1DM	Saddle mount, 1 monitor, double arm	9 ½	239	21	53	13	5.9
FSA1SM	Add-on arm, 1 monitor, single arm	5 ¼	133	11 ½	292	10	4.5
FSA1DM	Add-on arm, 1 monitor, double arm	7 ¼	184	19 ¼	489	11	4.9

Rev 07.10.26

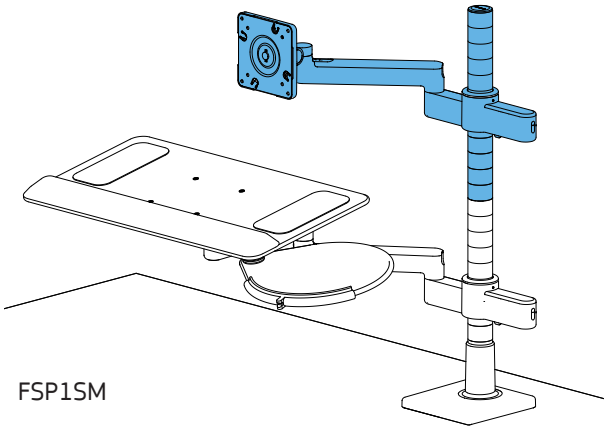

FSP1SM

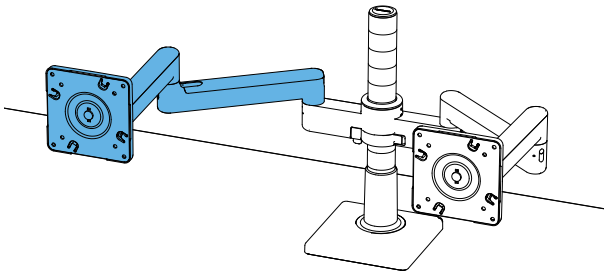

FSL1DM

MONITOR ARMS, ADD-ON POSTS

Add-on Post with articulating flat screen arms make it easy to manually adjust your monitor's placement to reduce eye, neck, and back strains.

- Extension arm extends in or out and can be rotated up to 360 degrees. Height is adjustable along the length of the post-mounted base.
- Can be used in conjunction with a separate keyboard or notebook holder.
- Supports monitors/accessories weighing up to 15 lbs.

How to Specify

Step 1. Product Number

FSP1 Monitor Arm, Add-on Post

FSL1 Monitor Arm Set, Add-on

Step 2. Arm

NM No Arm

SM Single Arm

DM Double Arm

DP Spring Adjustable Double Arm *(FSP1 only*)*

**FSP1: See SIP Catalog, page 11.7*

Step 3. Finish Color Code

BK Black

SG Silver with Grey Trim

WA Polished Aluminum with White Trim

Product Number	Description	Height		Depth		Weight	
		in.	[mm]	in.	[mm]	lb.	[kg]
FSP1NM	12" post, no arm, 1 monitor	13	330	3 ¾	95	10	5.0
FSP1SM	12" post, 1 arm, 1 monitor	13	330	11 ½	292	12	5.0
FSP1DM	12" post, 2 arms, 1 monitor	13	330	19 ¼	489	13	6.0
FSL1SM	Arm set, single, 8" straight arm, 1 monitor	5 ¼	133	11 ½	292	7	3.0
FSL1DM	Arm set, double, 8" straight arms, 1 monitor	7 ¼	184	19 ¼	489	10	5
FSL1DP	Arm set, single, 8" straight arm, single dynamic arm, 1 monitor	13 ¾	349	26	660	14	6.5

Rev 07.10.26

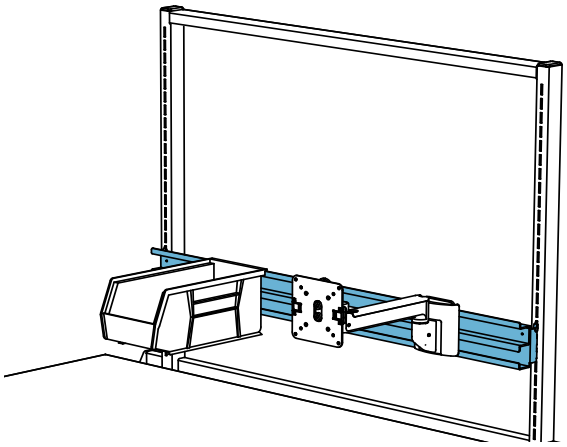

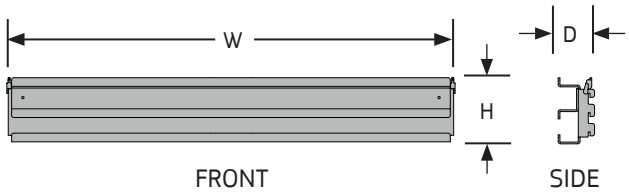

SLATWALL / BIN RAIL

Slatwall / Bin Rail provides for mounting and horizontal adjustment of slatwall-mounted arms and industry standard slatwall components. Rail mounts to Riser Frame and adjusts vertically in one inch increments. Load capacity is 40 pounds.

- Holds standard plastic part bins, *sold separately*. See page 7.6.
- Supports a flat panel mount or single monitor arm.

How to Specify

Step 1. Product Number

PSBR

Step 2. Width

24 24" wide **30** 30" wide **36** 36" wide

Step 3. Paint Color Code

AS Argent Silver
AW Arctic White
BK Black
GL Grey Light
NW Neutral White

MONITOR ARM, SLATWALL MOUNT

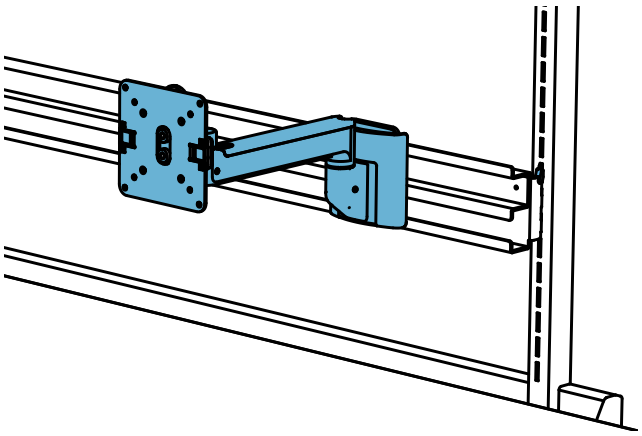

- Arm includes both 75mm and 100mm VESA mounting brackets and supports monitor / accessories weighing up to 15 pounds.
- Provides 360° view in portrait or landscape, with built-in cable management.
- A Vertical Adjustment Mechanism (FSVAMBK) can be added to the arm to provide 9" of vertical adjustment. Finish is Silver with Black trim only. See page 6.3.

How to Specify

Step 1. Product Number

FSW1NM Slatwall Mount, 1 monitor, no arm
FSW1SM Slatwall Mount, 1 monitor, single arm

Step 2. Finish Color Code

BK Black
SG Silver with Grey Trim
WA Polished Aluminum with White Trim

Product Number	Description	Height		Width		Depth		Weight	
		in.	[mm]	in.	[mm]	in.	[mm]	lb.	[kg]
PSBR24	Slatwall / bin rail	3 ½	89	24	610	2	48	5	2.3
PSBR30	Slatwall / bin rail	3 ½	89	30	762	2	48	7	2.9
PSBR36	Slatwall / bin rail	3 ½	89	36	914	2	48	8	3.4
FSW1NM	Slatwall, 1 monitor, no arm	3 ¾	95			5	127	2	1.0
FSW1SM	Slatwall, 1 monitor, single arm	4 ¼	108			12	292	8	3.4

Rev 07.10.26

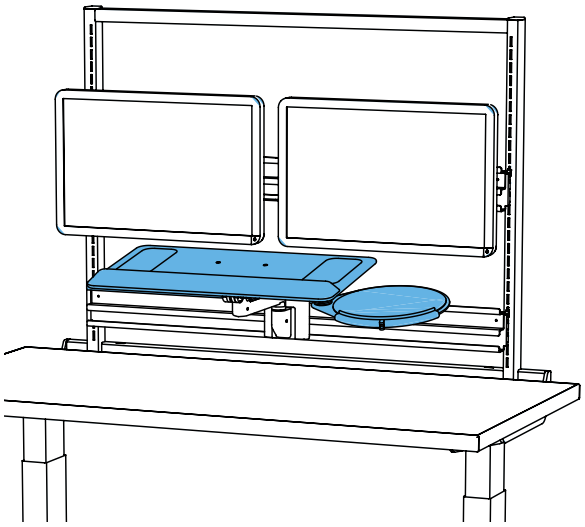

ARM MOUNT PLATFORM, KEYBOARD, MOUSE TRAY

Arm Mount Platform can help save valuable space on a work surface and mounts to all Symbiote Monitor Arms. Load capacity is 15 pounds.

- Keyboard Tray measures 10⅝" deep by 20⅛" wide and includes a black non-skid pad and removable foam wrist rest.
- Mouse Tray measures 9" round in diameter and can mount on the left or right side of Keyboard Tray. Includes a black non-skid pad and can swivel 270° allowing it to hide under the Keyboard Tray when not being used.
- Finish is Black.

How to Specify

Step 1. Product Number

FSKTBK

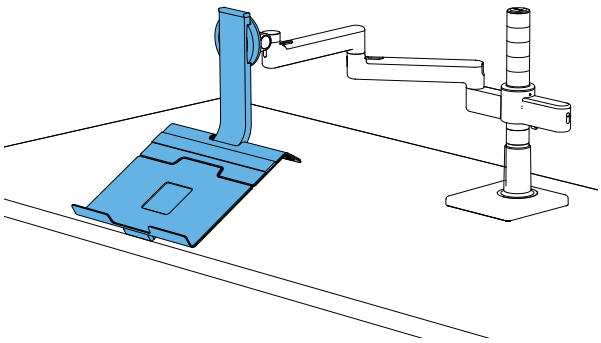

NOTEBOOK HOLDER

The Notebook Holder has an adjustable tray and supports notebooks up to 18" for a more ergonomic workspace.

- Attaches to any Monitor Arm, sold separately, (see page 6.3), for positioning at the optimum height and focal length.
- Viewing angle can be tilted up to 35° forward to reduce screen glare.
- Tray supports notebooks/accessories weighing up to 12 lbs.

How to Specify

Step 1. Product Number

FSNB

Step 2. Finish Color Code

SG Silver
WA White

Product Number	Description	Width		Depth		Weight	
		in.	[mm]	in.	[mm]	lb.	[kg]
FSKTBK	Flat screen keyboard platform	20 ⅛	511	14 ¾	375	6.5	2.9
FSNB	Notebook holder	14	356	11	279	5.0	2.0

Rev 07.10.26

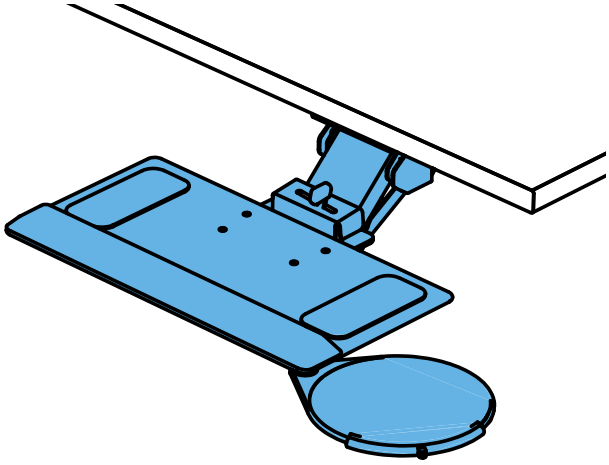

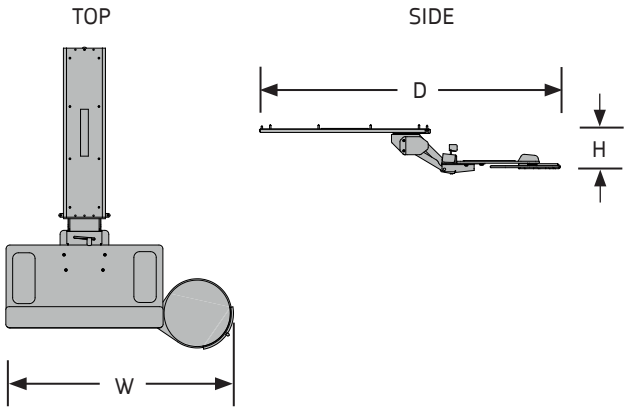

KEYBOARD WITH MOUSE TRAY, SURFACE MOUNT

The 10⅝" deep by 20⅛" wide platform provides storage for keyboards beneath surfaces. Includes a black non-skid pad and a removable foam wrist rest that leaves 8" of usable tray depth when in place. Keyboard mechanisms adjust in height with a simple one-handed motion without the use of locks, levers or knobs. Unique angle adjustment levers allow users to simply adjust the angle by sliding the lever from left to right.

The included 9" diameter round Mouse Tray mounts on the left or right side of Keyboard Tray and swivels 360° to hide under the trays when not being used. Includes a black non-skid pad and movable stopper to protect the mouse from falling off the tray.

- Trays feature 4¼" of spring assisted vertical travel and have a tilt adjustment range of 0 to -10°.
- Trays swivel 360° and sliding tracks provide 16" travel range allowing trays to retract under surfaces. In the forward most position, the front of the Keyboard Tray extends 14" from the front of the surface.
- Keyboard Tray only mounts under standard and corner work surfaces > 24" deep.
- Load capacity is 25 lbs.
- Finish is Black.

How to Specify

Step 1. Product Number

KTAMBK

Product Number	Description	Height		Width		Depth		Weight	
		in.	[mm]	in.	[mm]	in.	[mm]	lb.	[kg]
KTAMBK	Surface mount	4 ¾	121	29 ½	749	21 ¾	552	15	6.8

Rev 07.10.26

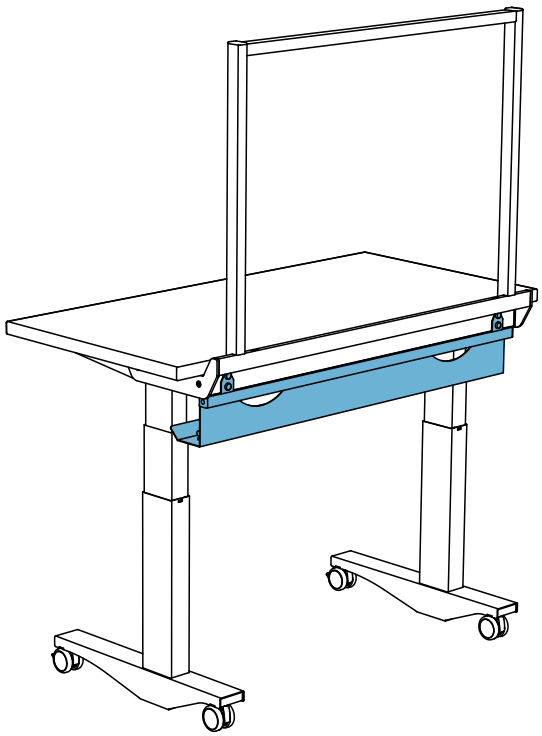

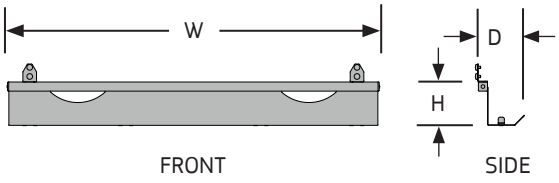

CABLE TRAY

Cable Trays organize your power and data cables neatly and efficiently under the work surface. Cords and devices move safely in unison while raising and lowering the adjustable ErgoStat Pro Base.

- The Cable Tray is made of high-quality steel and is powder coated.
- Attaches to the back of the Base with an aluminum rail using two mounting holes.
- Load capacity is 15 lbs.

How to Specify

Step 1. Product Number

PCTA

Step 2. Width

36 36" wide
42 42" wide
48 48" wide
60 60" wide
72 72" wide

Step 3. Paint Color Code

AS Argent Silver
AW Arctic White
BK Black

Product Number	Description	Height		Width		Depth		Weight	
		in.	[mm]	in.	[mm]	in.	[mm]	lb.	[kg]
PCTA36	36" base mount	4 ¾	121	29	737	5	127	6	2.7
PCTA42	42" base mount	4 ¾	121	35	889	5	127	7	3.2
PCTA48	48" base mount	4 ¾	121	41	1041	5	127	9	3.9
PCTA60	60" base mount	4 ¾	121	53	1346	5	127	11	5.0
PCTA72	72" base mount	4 ¾	121	65	1651	5	127	13	5.9

Rev 07.10.26

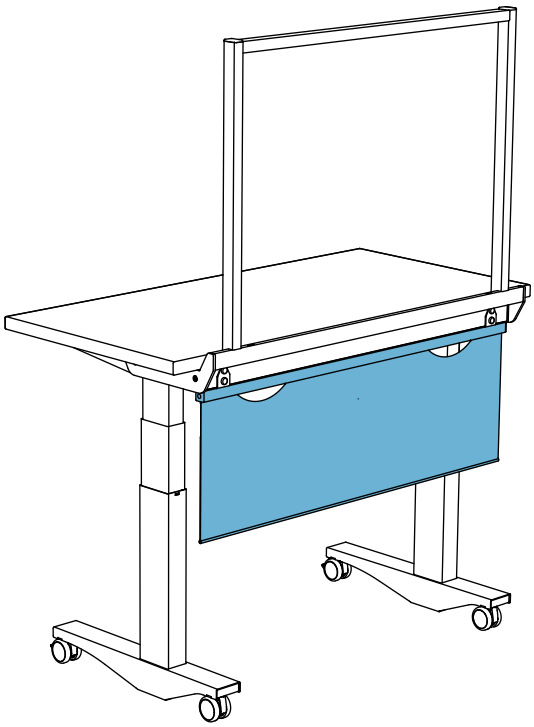

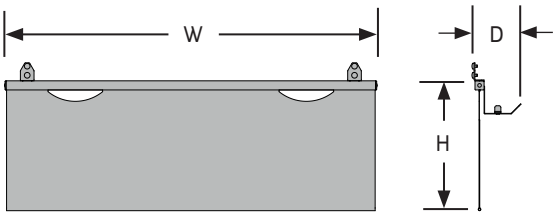

FRONT SIDE

MODESTY PANEL

The Modesty Panel adds privacy and aesthetics to your workspace—a great solution for the open-concept office or lab area. Made of fabric, the Modesty Panel hangs from an aluminum rail from the underside of the ErgoStat Pro Base.

- Modesty Panels deliver better privacy in a sleek design with two inside sewn pockets to store unsightly cables.
- Included cable tray helps to organize power and data cables.

How to Specify

Step 1. Product Number

PMP

Step 2. Width

36 36" wide
42 42" wide
48 48" wide
60 60" wide
72 72" wide

Step 3. Fabric Color Code

BLK Black

Step 4. Paint Color Code

AS Argent Silver
AW Arctic White
BK Black

Product Number	Description	Height		Width		Depth		Weight	
		in.	[mm]	in.	[mm]	in.	[mm]	lb.	[kg]
PMP36	36" base mount	14 ¼	362	29	737	5	127	4	1.8
PMP42	42" base mount	14 ¼	362	35	889	5	127	5	2.3
PMP48	48" base mount	14 ¼	362	41	1041	5	127	6	2.7
PMP60	60" base mount	14 ¼	362	53	1346	5	127	8	3.6
PMP72	72" base mount	14 ¼	362	65	1651	5	127	11	5.0

Rev 07.10.26

this page left
BLANK

SECTION 7. STORAGE / ACCESSORIES

Pedestal Drawers, Hanging 7.2
Pencil Drawer 7.3
Totes and Tote Bearers 7.4
Tote Holders, Surface Mount 7.5
Storage Bins 7.6
White Board 7.7
Privacy Panel / Tackable Insert 7.8
Pegboard 7.9
Riser Frame Drawers 7.10

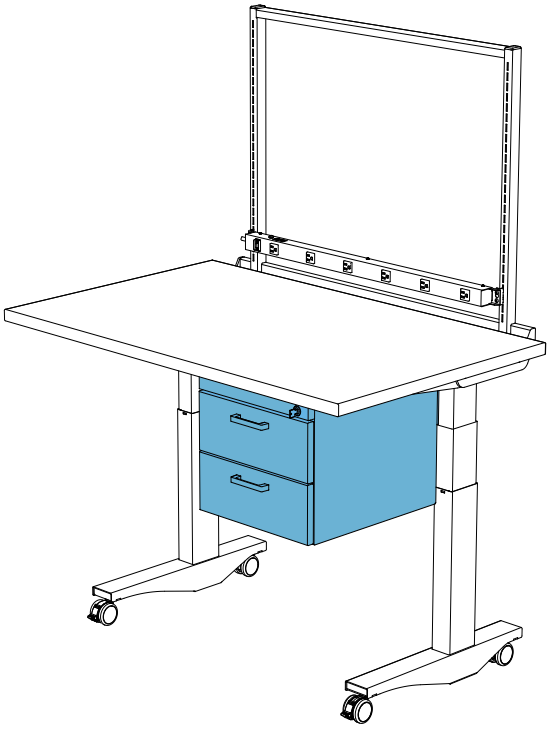

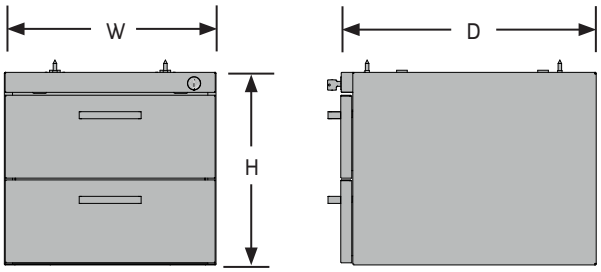

PEDESTAL DRAWERS, HANGING

Pedestal drawers have double-wall drawer fronts and drawer sides. Drawers feature ball-bearing slides with quick disconnect and anti-rebound features (full-extension slides on file drawers, ¾-extension on box drawers). Pedestals meet or exceed ANSI-BIFMA standards for safety and reliability.

- Load capacity is up to 50 lbs. per drawer, not to exceed 150 lbs. per unit.
- Pedestals are keyed randomly (UM226-425) unless otherwise specified. Master keys and core removal keys available; consult factory.

How to Specify

Step 1. Product Number

PH

Step 2. Drawer Size / Style

6 box, maximum 2
12 file, maximum 1

Step 3. Paint Color Code

AS Argent Silver
AW Arctic White
BK Black
GL Grey Light
NW Neutral White

Product Number	Description	Height		Width		Depth		Weight	
		in.	[mm]	in.	[mm]	in.	[mm]	lb.	[kg]
PH6	Hanging box	7 ⅝	194	15	381	18	457	22	10.0
PH66	Hanging box/box	13 ⅝	346	15	381	18	457	33	15.0
PH12	Hanging file	13 ⅝	346	15	381	18	457	28	12.7

Rev 07.10.26

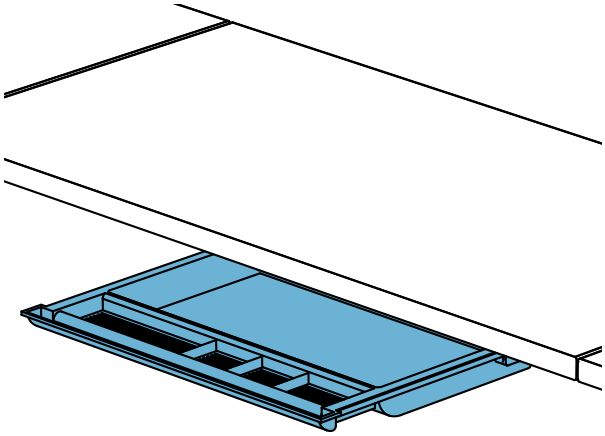

PENCIL DRAWER

Black plastic drawers provide storage for pencils, pens, office accessories and other small items. Drawers only mount under standard and corner work surfaces > 24" deep.

- Surfaces are not pre-drilled for pencil drawers.
- Load capacity is 25 lbs.

How to Specify

Step 1. Product Number

PD2015BK

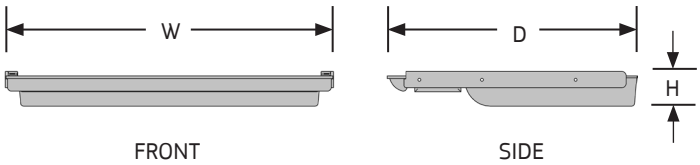

Product Number	Description	Height		Width		Depth		Weight	
		in.	[mm]	in.	[mm]	in.	[mm]	lb.	[kg]
PD2015BK	Pencil drawer, black	2	51	21	533	18	457	5	2.3

Rev 07.10.26

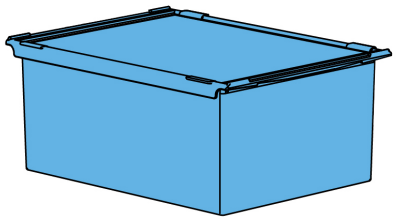

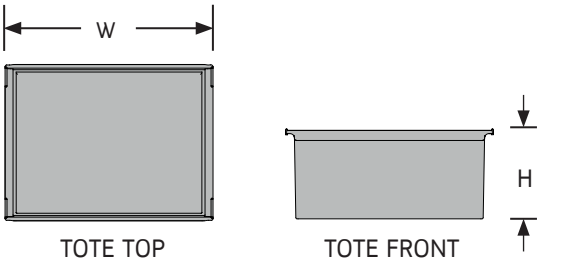

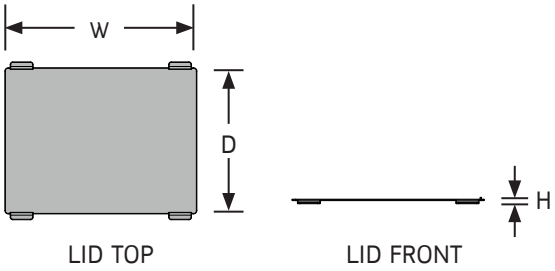

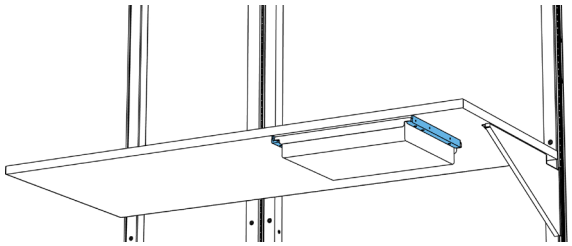

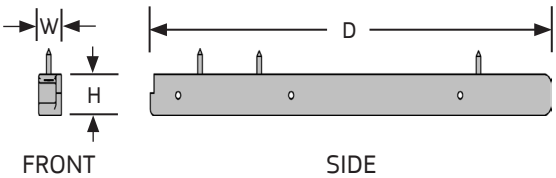

TOTES AND TOTE BEARERS

Totes

Totes provide storage and a means of transportation for materials in workstations. Totes mount beneath surfaces as drawers using Tote Bearers or slide into Tote Holders for use as drawers.

- Load capacity is 25 lbs. when used with Tote Bearers and Tote Holders.
- Tote Bearers (see below) and Surface Mount Tote Holders (see page 7.5) are both sold separately.
- Tote finish is Ice.
- Tote Lid sold separately.

How to Specify

Step 1. Product Number

T3A 3" High
T6B 6" High
T9C 9" High

Step 2. Finish Color Code

CE Ice

Tote Bearers

Tote Bearers are compatible with Symbiote Totes and Co/Struc® products. Bearers include an integral stop to prevent Totes from extending out of the track. Sold as a pair. Plastic finish is Dark Tone.

- Tote Drawers are available. Contact Symbiote customer service for pricing and availability.
- Tote Bearers only mount under standard and corner work surfaces > 24" deep.

How to Specify

Step 1. Product Number

TBDT

Product Number	Description	Height		Width		Depth		Weight	
		in.	[mm]	in.	[mm]	in.	[mm]	lb.	[kg]
T3ACE	A tote	3	76	20 5/8	524	15 1/2	394	3	1.4
T6BCE	B tote	6	152	20 5/8	524	15 1/2	394	4	1.8
T9CCE	C tote	9	229	20 5/8	524	15 1/2	394	5	2.3
TBDT	Tote bearer, pair	3/4	19	1	25	14 1/4	362	1	.5

Rev 07.10.26

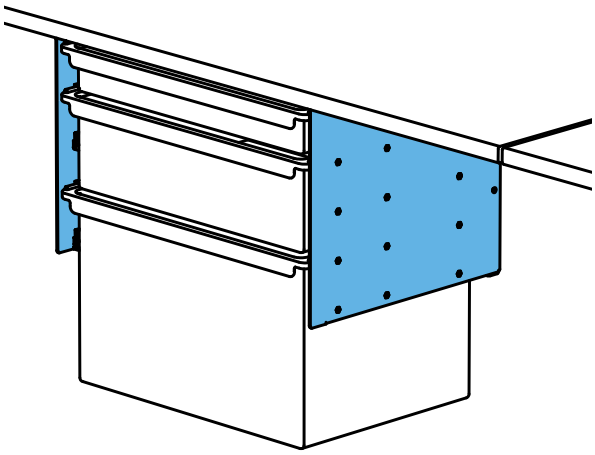

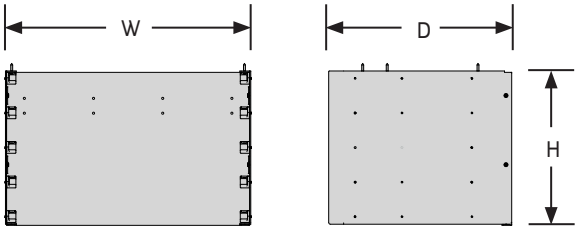

FRONT SIDE

TOTE HOLDERS, SURFACE MOUNT

Tote Holders provide storage for Symbiote Totes below a work- surface. Steel units include five slots in 3" intervals for Tote storage. Tote Holders only mount under standard and corner work surfaces > 24" deep.

- Load capacity 125 lbs. total with a maximum capacity of 25 lbs. per Tote.
- Totes sold separately; see page 7.4.

How to Specify

Step 1. Product Number

STHS5

Step 2. Paint Color Code

AS Argent Silver
AW Arctic White
BK Black
GL Grey Light
NW Neutral White

Product Number	Description	Height		Width		Depth		Weight	
		in.	[mm]	in.	[mm]	in.	[mm]	lb.	[kg]
STHS5	Surface mount	13 3/8	340	21 1/4	540	15 7/8	403	25	11.3

Rev 07.10.26

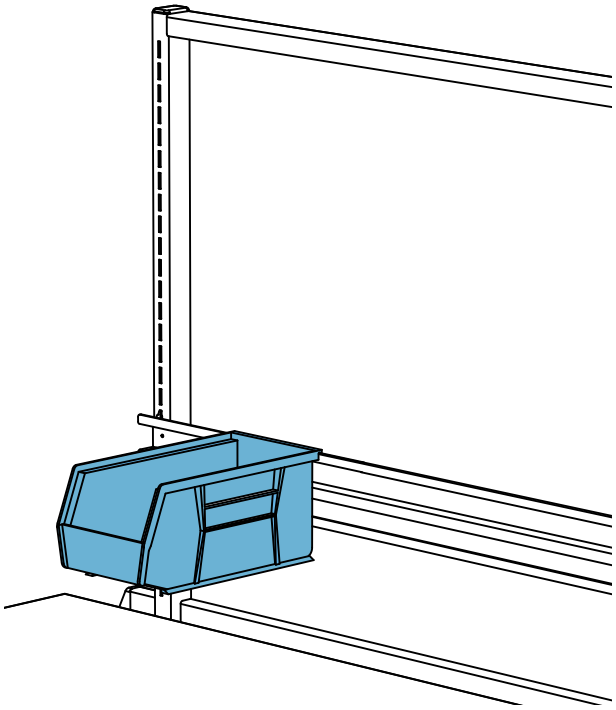

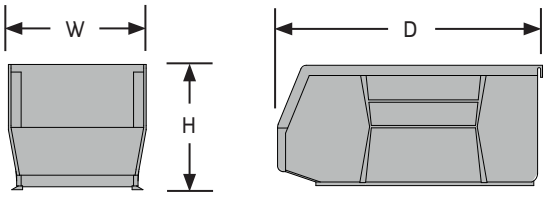

FRONT SIDE

STORAGE BINS

Bins provide storage and organization of small items. Made from a heavy-duty industrial grade polymer, Bins hang from Slatwall/Bin Rails or stack together. Load capacity is 30 lbs per bin.

- Sold in packages of 5.
- Available in blue (BL) or clear (CL).

How to Specify

Step 1. Product Number

AB30230

Step 2. Finish Color Code

BL Blue
CL Clear

Product Number	Description	Height		Width		Depth		Weight	
		in.	[mm]	in.	[mm]	in.	[mm]	lb.	[kg]
AB30230BL	Akro Bin, 5-pack, blue	5	127	5 ½	140	10 ⅞	276	½	0.2
AB30230CL	Akro Bin, 5-pack, clear	5	127	5 ½	140	10 ⅞	276	½	0.2

Rev 07.10.26

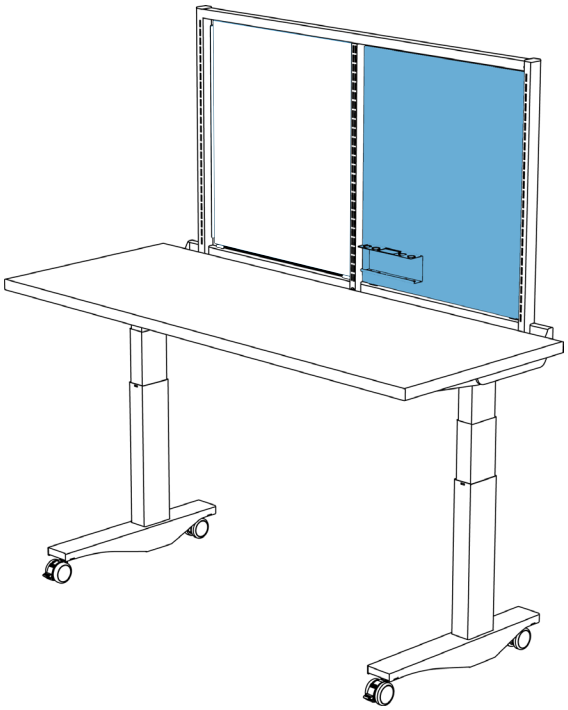

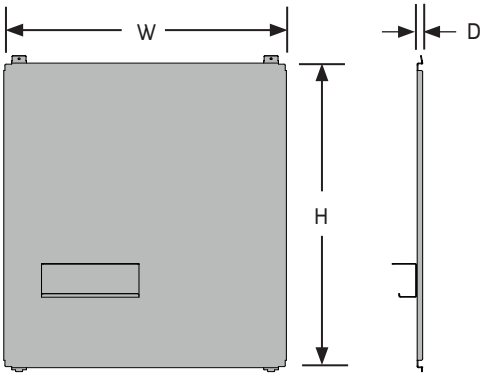

WHITE BOARD PANEL FRONT SIDE

WHITE BOARD

Whiteboards provide a writeable surface that is also magnetic. It mounts on the inside of the Pro Riser Frame and sits flush to the front of the frame. The brackets to attach to the frame will be black in color.

- White Board includes a black tray used to hold up to four dry erase markers and an eraser. Tray has a high energy magnet on the back for mounting anywhere on the White Board.

How to Specify

Step 1. Product Number
PMBE29 White Board

Step 2. Width
24 24" wide
30 30" wide
36 36" wide

Product Number	Description	Height		Width		Depth		Weight	
		in.	[mm]	in.	[mm]	in.	[mm]	lb.	[kg]
PMBE2924	White board	25 ⅓	643	22	559	⅛	3.175	6	2.8
PMBE2930	White board	25 ⅓	643	28	711	⅛	3.175	8	3.5
PMBE2936	White board	25 ⅓	643	34	864	⅛	3.175	9	4.0

Rev 09.03.26

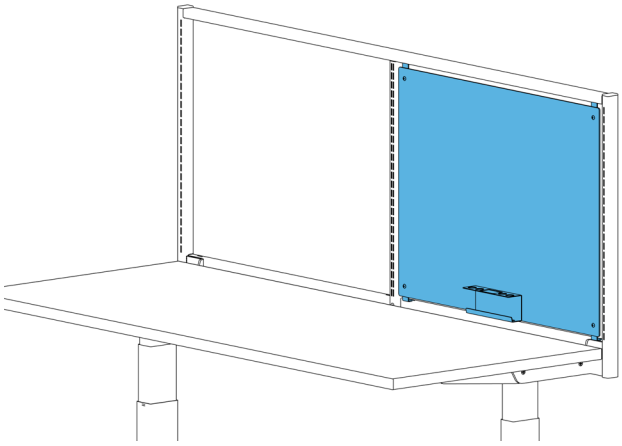

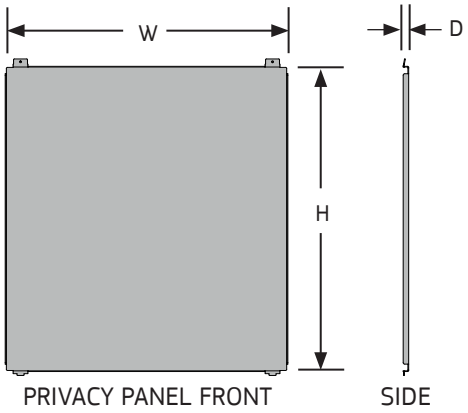

PRIVACY PANEL FRONT SIDE

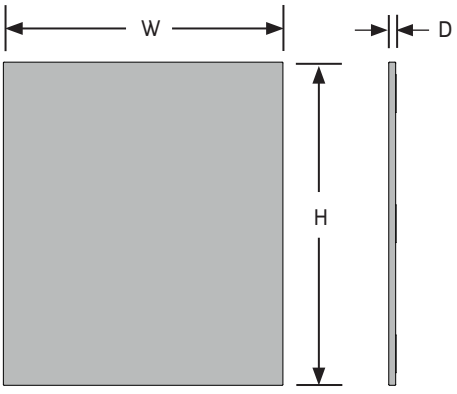

TACKABLE INSERT FRONT SIDE

PRIVACY PANEL / TACKABLE INSERT

The Privacy Panel and Tackable Insert work together to provide a usable division of space. The Privacy Panel is painted steel and houses the Tackable Insert. The tackable insert is a low-density foam core covered with fabric. It attaches to the Privacy Panel with high energy magnetic strips.

- Privacy Panels and Tackable Inserts are sold separately.
- No tools necessary for installation.

How to Specify

Step 1. Product Number

PRPM29 Privacy Panel
PPT29 Tackable Insert

Step 2. Width

24 24" wide
30 30" wide
36 36" wide

Step 3. Paint Color Code *(Privacy Panel Only)*

AS Argent Silver
AW Arctic White
BK Black
GL Grey Light
NW Neutral White

Step 4. Fabric Color Code *(Tackable Insert Only)*

A2035 Angora
A2053 Asteroid
A2047 Eucalyptus
A2084 Geranium
A2079 Graphite
A2691 Waterfall

Product Number	Description	Height		Width		Depth		Weight	
		in.	[mm]	in.	[mm]	in.	[mm]	lb.	[kg]
PRPM2924	Privacy panel	26	659	22 ½	572	½	11	10	4.7
PRPM2930	Privacy panel	26	659	28 ½	724	½	11	13	5.9
PRPM2936	Privacy panel	26	659	34 ½	876	½	11	16	7.1
PPT2924	Tackable insert	25 ¾	654	22 ¼	565	⅝	16	1	0.5
PPT2930	Tackable insert	25 ¾	654	28 ¼	718	⅝	16	1	0.6
PPT2936	Tackable insert	25 ¾	654	34 ¼	870	⅝	16	2	0.7

Rev 09.02.26

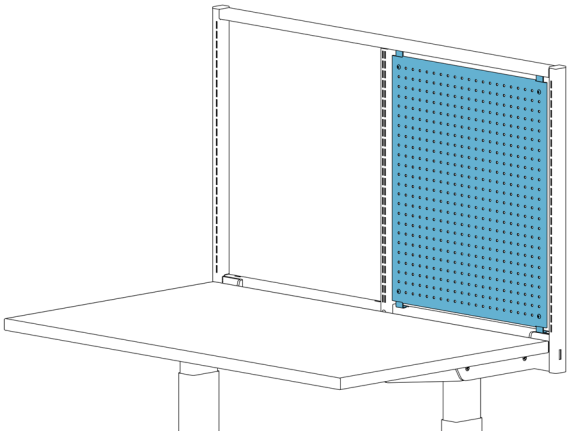

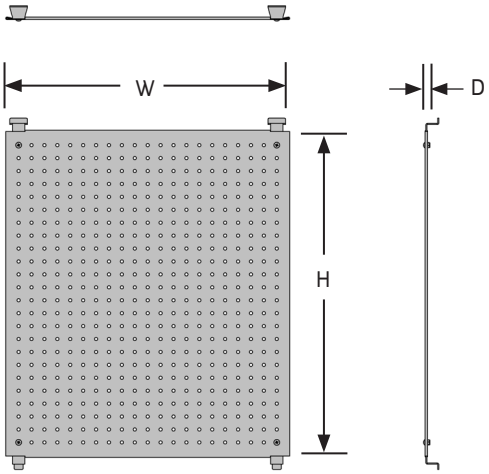

PEGBOARD

Pegboards provide for the display of tools and work aids in workstations. Pegboards are formed of steel and feature ¼" dimeter holes. They mount inside the Pro Riser Frames and painted any standard color.

How to Specify

Step 1. Product Number

PPB29

Step 2. Width

24 24" wide
30 30" wide
36 36" wide

Step 3. Paint Color Code

AS Argent Silver
AW Arctic White
BK Black
GL Grey Light
NW Neutral White

Product Number	Description	Height		Width		Depth		Weight	
		in.	[mm]	in.	[mm]	in.	[mm]	lb.	[kg]
PPB2924	Pegboard	25 ¼	641	22	559	1	25	10	4.5
PPB2930	Pegboard	25 ¼	641	28	711	1	25	13	5.7
PPB2936	Pegboard	25 ¼	641	34	864	1	25	16	6.9

Rev 08.19.26

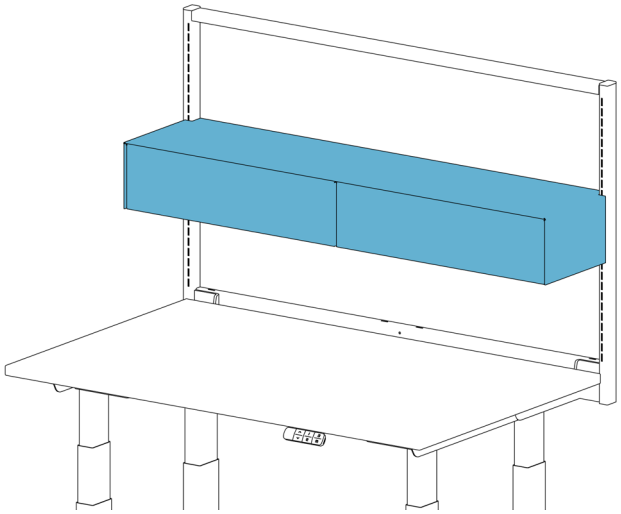

RISER FRAME DRAWERS

Riser Frame Drawer provide a two drawer unit finished on all sides, that attach to the Pro Riser Frame. Full extension slides allow full access to the drawers while the top can be used as shelf or monitor stand.

- Components that attach into the slots can be used in conjunction with the drawers- plug strips, monitor arms, and Slatwall and Bin Rails.
- Each Drawer can hold up to 15lbs. with a max capacity of the whole unit of 100lbs.

Note: when installed the Riser Spine will be removed, and White Boards Peg Boards, and Privacy Panels/Tackboards can NOT be installed.

Locking Units are available please contact factory.

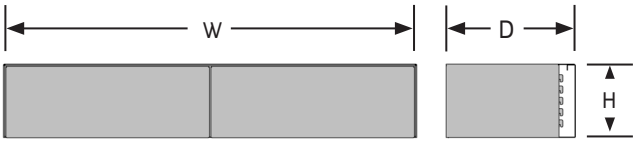

How to Specify

Step 1. Product Number

PRFD

Step 2. Product Depth

11 11" deep

Step 3. Product Witdth

48 48" wide

Step 4. Paint Color Code

AS	Argent Silver	**GL**	Grey Light
AW	Arctic White	**NW**	Neutral White
BK	Black		

Product Number	Description	Height		Width		Depth		Weight	
		in.	[mm]	in.	[mm]	in.	[mm]	lb.	[kg]
PRFD1148N	Pro Riser Frame Drawer 48" wide Non Locking	6.5	165	48	1219	11.5	292	46	21

Rev 09.08.26